SCSP24TWIN
SCSP24TWINBK

See current catalogue for further detail

Twin Spotlight

- 24 Watt twin LED spotlight
- 2000 lumens
- Selectable Tricolour: 3000K, 4000K, 5700K
- IP54
- 120° light angle
- -20°C to +40°C Operating temperature
- Available in White and Black
- Compatible with SCSPSENSOR or SCSPSENSORBK to upgrade to be controlled via a sensor

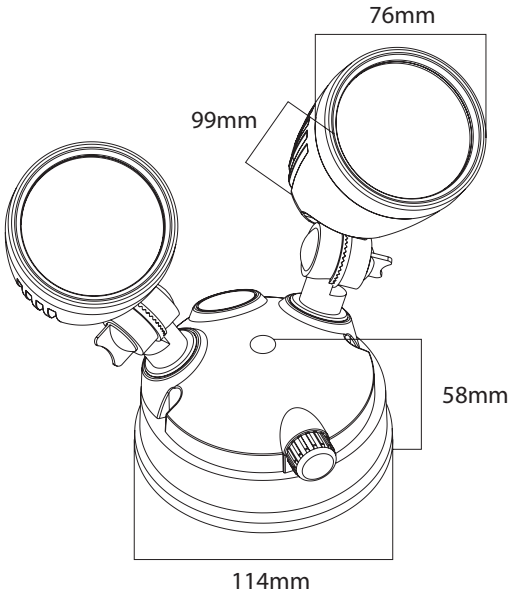

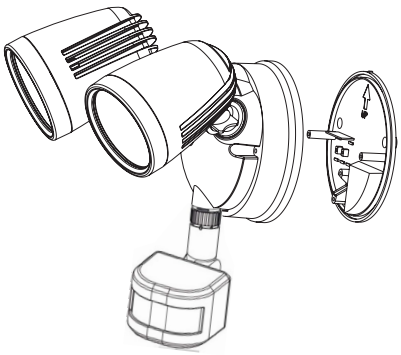

SCSP24TWIN/BK
Upgraded with
SCSPSENSOR/BK

Cleaning Guide:

Spraying cleaning products on to electrical products is not recommended.

It is important to ensure that switches are turned off before cleaning.

Do not use any cleaning sprays - only wipe down with damp cloth or rub with dry cloth. (Do not use an abrasive cloth as it may scratch the plastic).

Do not use harsh chemical cleaners as these can break down the plastic and cause it to crack.

Catalogue Number	Description
SCSP24TWIN	Spot Light LED Twin 24W Tri Colour Temperature 3K 4K 5K Upgradeable with PIR Sensor SCSPSENSOR
SCSP24TWINBK	Spot Light LED Twin 24W Tri Colour Temperature 3K 4K 5K Upgradeable with PIR Sensor SCSPSENSORBK Black

Certification Number:
GMA-515501

GSM Electrical (Australia) Pty Ltd
5-9 Rundle Street, Kent Town SA 5067
P: 1300 301 838 | E: service@gsme.com.au
www.gsme.com.au