SCFL10F

See current catalogue for further detail

LED Floodlight, Frameless

Product Specification	
Part Code	SCFL10F
Lumen Output	**900lm**
Power	10W
Weight	0.353kg
Voltage Rating	220-240V~ 50Hz
Colour Temp	4000K
IP Rating	**IP65**
LED Lamp Life (L70)	20,000Hrs
Beam Angle	110°
CRI	>70
Cable Length	900mm
Operating Temp	-10°C to 40°C ta. 40°C
Electrical Class	Class I
Product colour	Black
Fascia colour	Black with black frame
Installation	Locking hinge bracket
Warranty	**Two (2) Years**
Dimensions L x W x H (mm) (refer diagram below)	120 x 27 x 88

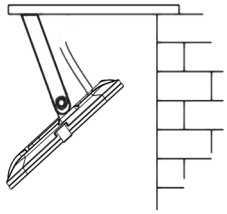

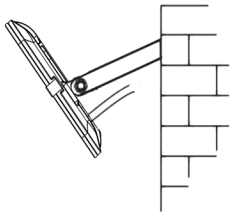

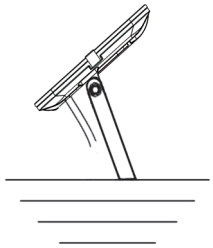

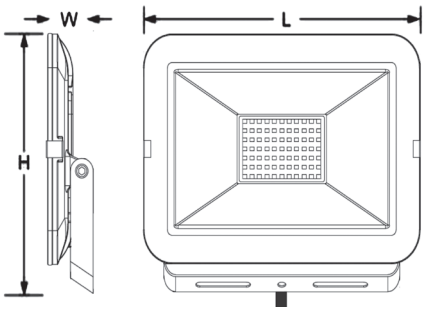

Photometric B Plane Distribution Diagram

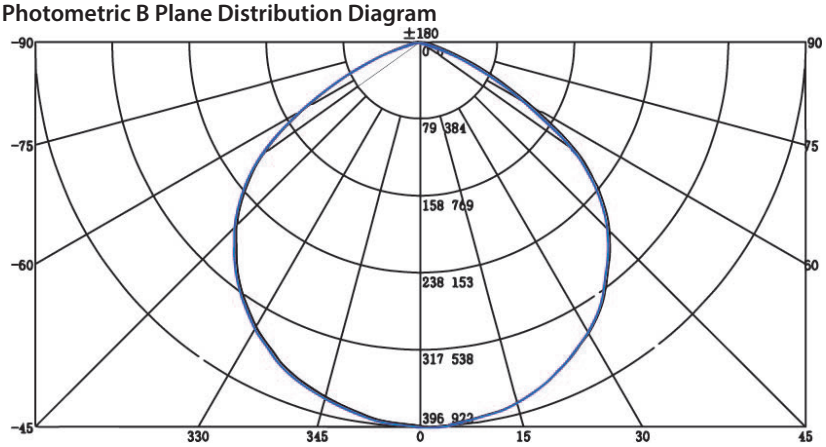

Catalogue Number	Description
SCFL10F	Floodlight LED Slimline 10W 900LM 4000K IP65 Frameless

Cleaning Guide:

Spraying cleaning products on to electrical products is not recommended.

It is important to ensure that switches are turned off before cleaning.

Do not use any cleaning sprays - only wipe down with damp cloth or rub with dry cloth. (Do not use an abrasive cloth as it may scratch the plastic).

Do not use harsh chemical cleaners as these can break down the plastic and cause it to crack.

Certification Number:
GMA-516004

GSM Electrical (Australia) Pty Ltd
5-9 Rundle Street, Kent Town SA 5067
P: 1300 301 838 | E: service@gsme.com.au
www.gsme.com.au

100% AUSTRALIAN OWNED & OPERATED

2 Yr Warranty TRADER