TRADER RHINO™

TRADER®

RHSWL220
RHSWL232
RHSWL240
RHSWL263
RHSWL320
RHSWL332
RHSWL340
RHSWL363
RHSWL420
RHSWL432
RHSWL440
RHSWL463

See current catalogue for further detail

Switch Disconnector

The Rhino switch disconnector range has been developed for heavy duty applications where the rigorous impacts of industry are too much for other forms of switches.

- The heavy-duty housings in powder coated die cast Aluminium are able to stand up to higher levels of rough treatment.
- The aluminium back boxes have been designed with the same footprint as others in the market to allow easy replacement where needed.
- The entries for the back boxes have been specifically made to suit steel wired armour cable gland adaptors and have been raised from the rear to accommodate the fit of the nuts.
- Threaded entries are sealed using Nickel Plated brass threaded bungs.
- Cover is earthed to the back box via and internal wire loop.
- The 20A models have been certified in accordance with AS/NZS3133 and 20A, 32A, and 63A have also been tested complied with IEC and AS 60947-3 with the 32A and 63A models being listed on a certificate of suitability.
- Heavy Duty terminals with diameter 7.6mm terminals suitable for 25mm2 cable.
- Switch supplied with a large, easy to use knob, suitable for use with heavy industrial gloves.
- Has a positive rotary action.
- Switch Knob features two Oval Shape (11 x 9mm) lock off facilities.
- Suits 9.0mm padlock staple.
- Conduit plugs provided with rubber gaskets to assist IP rating and to aid secure fitment.
- Raised ON/OFF marking to allow visibility in dusty environments.
- Laser etched product marking (no adhesive labels that fall off).
- All models have been tested and comply with AS/NZS 3133 M200 motor rating as shown in the table.
- In addition, the Utilization category of AC23A for motors and highly inductive loads is rated a Ie=20A for 20A, Ie=32 for 32A , Ie=40 for 40A Models and Ie=50A for 63A.
- Pollution Degree: 2
- Recommended screw torque for corner cover screws 1.2Nm
- Recommended torque for Earth/Neutral fixed terminals 2Nm
- Recommended torque for Switch terminals 2.5Nm

Catalogue Number	Description
RHSWL220	Switch Disconnector Weatherproof IP66 20A 500V ac 2 Pole Large Aluminium Yellow
RHSWL232	Switch Disconnector Weatherproof IP66 32A 500V ac 2 Pole Large Aluminium Yellow
RHSWL240	Switch Disconnector Weatherproof IP66 40A 500V ac 2 Pole Large Aluminium Yellow
RHSWL263	Switch Disconnector Weatherproof IP66 63A 500V ac 2 Pole Large Aluminium Yellow
RHSWL320	Switch Disconnector Weatherproof IP66 20A 500V ac 3 Pole Large Aluminium Yellow
RHSWL332	Switch Disconnector Weatherproof IP66 32A 500V ac 3 Pole Large Aluminium Yellow
RHSWL340	Switch Disconnector Weatherproof IP66 40A 500V ac 3 Pole Large Aluminium Yellow
RHSWL363	Switch Disconnector Weatherproof IP66 63A 500V ac 3 Pole Large Aluminium Yellow
RHSWL420	Switch Disconnector Weatherproof IP66 20A 500V ac 4 Pole Large Aluminium Yellow
RHSWL432	Switch Disconnector Weatherproof IP66 32A 500V ac 4 Pole Large Aluminium Yellow
RHSWL440	Switch Disconnector Weatherproof IP66 40A 500V ac 4 Pole Large Aluminium Yellow
RHSWL463	Switch Disconnector Weatherproof IP66 63A 500V ac 4 Pole Large Aluminium Yellow

Certification Number:
GMA-528008
GMA-528009

GSM Electrical (Australia) Pty Ltd
5-9 Rundle Street, Kent Town SA 5067
P: 1300 301 838 | E: service@gsme.com.au
www.gsme.com.au

100% AUSTRALIAN OWNED & OPERATED

10 Yr Warranty

TRADER RHINO™

TRADER®

RHSWL220
RHSWL232
RHSWL240
RHSWL263
RHSWL320
RHSWL332
RHSWL340
RHSWL363
RHSWL420
RHSWL432
RHSWL440
RHSWL463

See current catalogue for further detail

Switch Disconnector

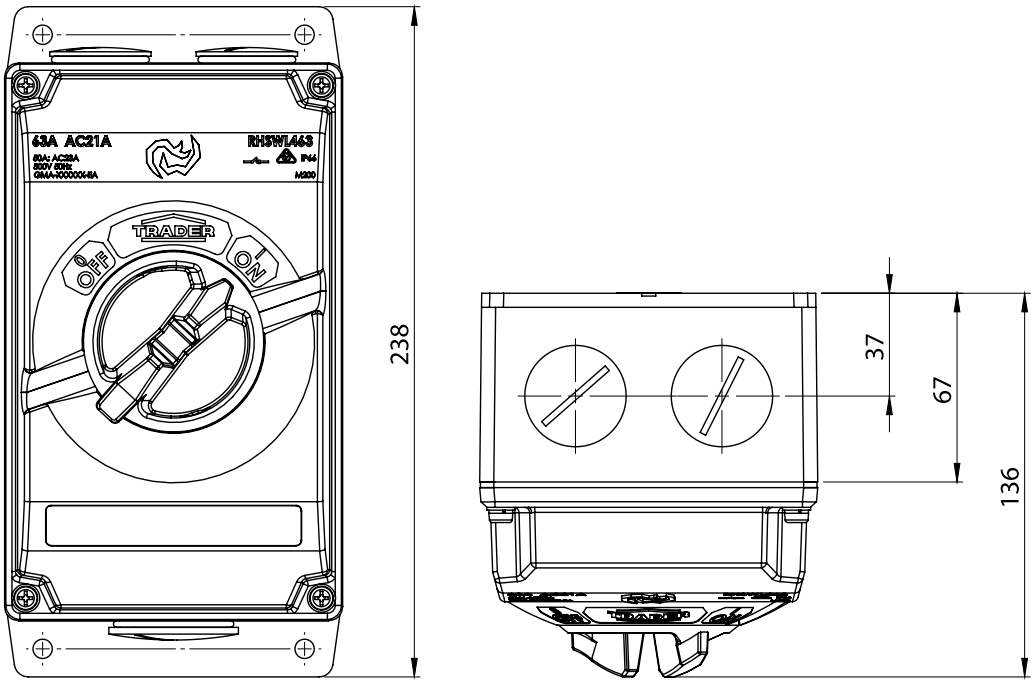

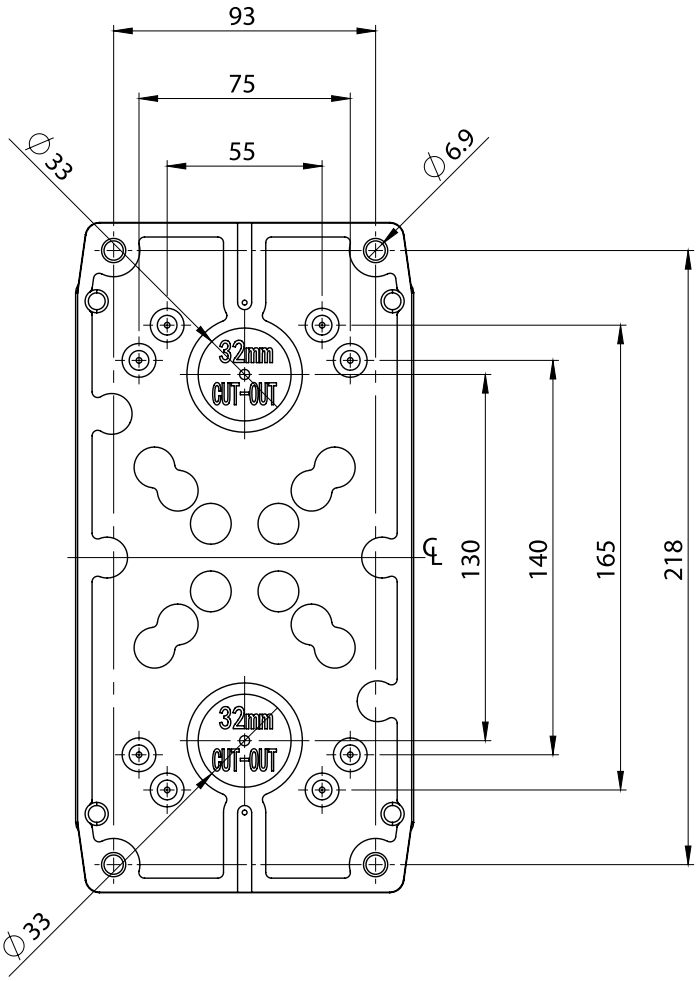

Certification Number:
GMA-528008
GMA-528009

GSM Electrical (Australia) Pty Ltd
5-9 Rundle Street, Kent Town SA 5067
P: 1300 301 838 | E: service@gsme.com.au
www.gsme.com.au

100% AUSTRALIAN OWNED & OPERATED

10 Yr Warranty TRADER