PUMA™

TRADER®

PUSWVA1G
PUSWVA2G
PUSWVA3G
PUSWVA4G

See current catalogue for further detail

Architrave Switches

- Switches are rated 10AX/16A 250V~
- Uses brass tunnel terminals that have the screws backed out for easier installation of cabling. Switches are two way with looping terminal and suit 4 x 1.5mm^2 cabling with 4.1mm bore
- Slotted head screws for the terminals
- Covers, plates and dollies are made from UV stabilised polycarbonate to avoid discolouring to yellow
- Standard colour is white.
- Approved to AS/NZS3133
- Typical example of size seen below:

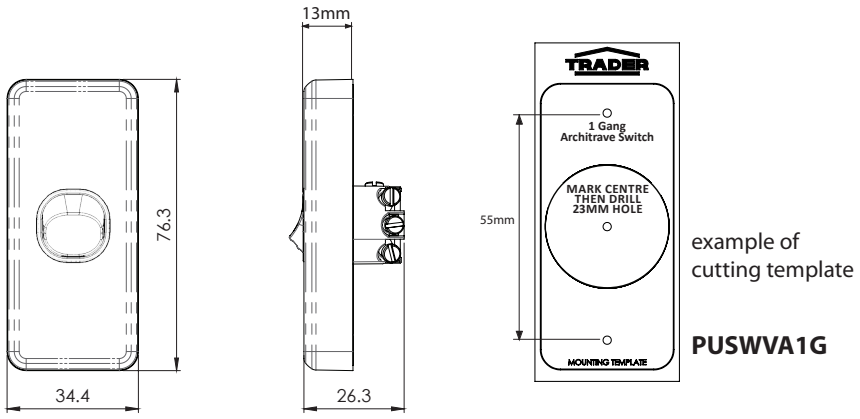

example of cutting template

PUSWVA1G

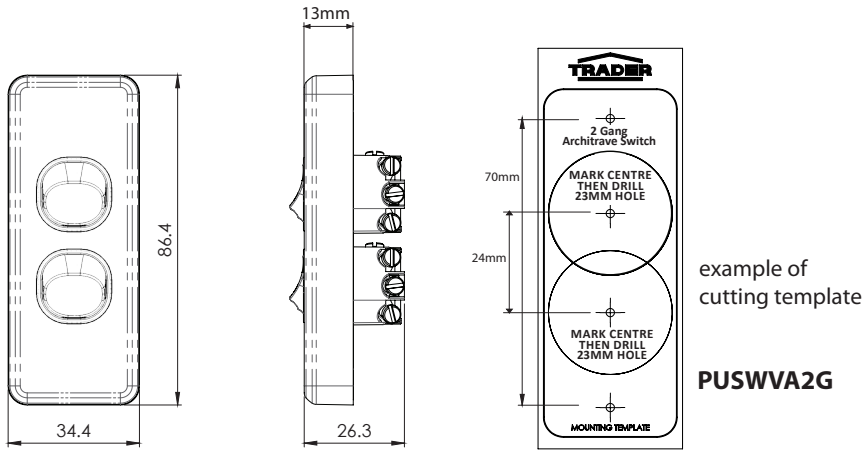

example of cutting template

PUSWVA2G

Cleaning Guide:

Spraying cleaning products on to electrical products is not recommended.

It is important to ensure that switches are turned off before cleaning.

Do not use any cleaning sprays - only wipe down with damp cloth or rub with dry cloth. (Do not use an abrasive cloth as it may scratch the plastic).

Do not use harsh chemical cleaners as these can break down the plastic and cause it to crack.

Catalogue Number	Description
PUSWVA1G	Switch Vertical Architrave 1 Gang 10AX 16A 250V ac White
PUSWVA2G	Switch Vertical Architrave 2 Gang 10AX 16A 250V ac White
PUSWVA3G	Switch Vertical Architrave 3 Gang 10AX 16A 250V ac White
PUSWVA4G	Switch Vertical Architrave 4 Gang 10AX 16A 250V ac White

*When ordering **BLACK** product add "**BK**" at end of catalogue number, ie PUSWVA1GBK*

Certification Number:
GMA-508434-EA
GSM Electrical (Australia) Pty Ltd
Level 2, 142-144 Fullarton Road, Rose Park SA 5067
P: 1300 301 838 | E: service@gsme.com.au
www.gsme.com.au

100% AUSTRALIAN OWNED & OPERATED

10 Yr Warranty