PUSWV6GKT4
PUSWKT

See current catalogue for further detail

Switch Key Tag

- Hospitality/Occupancy key tag access switch plate.
- Rated 16A/10AX per switch mechanism (4 in plate).
- 2 additional blank apertures for retrofitting additional switches or neon indicators where necessary.
- Ideal for use in hotels, site building access and other areas where the use of facilities needs to be controlled.
- 84mm mounting.
- Developed in the robust Puma Vandal proof series.
- Wall plate Overall height 24mm or 33mm with key inserted.
- Requires 120mm below the wall plate to allow the key to be inserted.
- Standard colour is white. Also available in black.

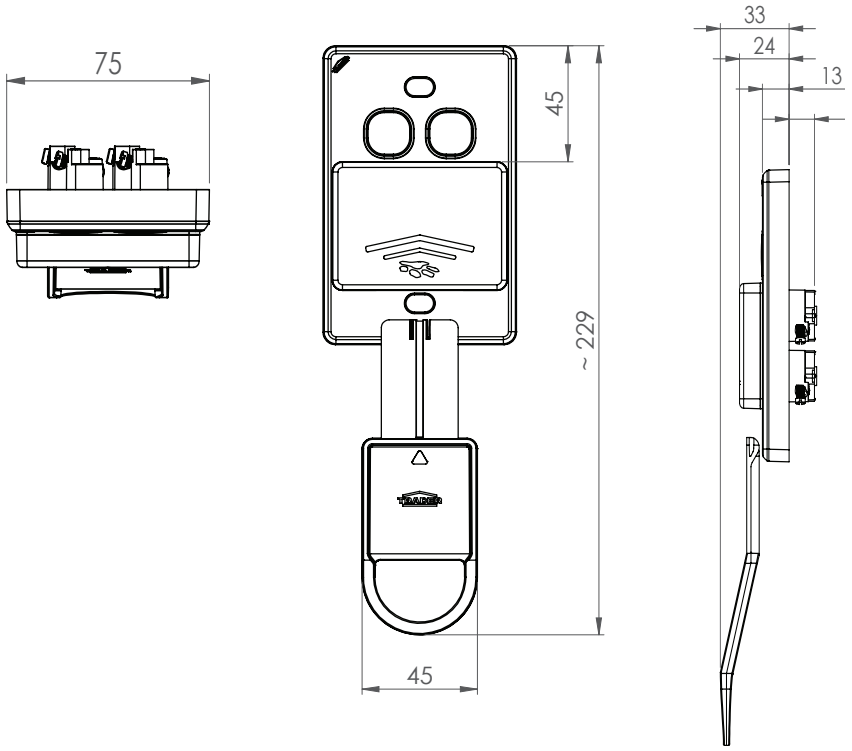

Cleaning Guide:

Spraying cleaning products on to electrical products is not recommended.

It is important to ensure that switches are turned off before cleaning.

Do not use any cleaning sprays - only wipe down with damp cloth or rub with dry cloth. (Do not use an abrasive cloth as it may scratch the plastic).

Do not use harsh chemical cleaners as these can break down the plastic and cause it to crack.

Catalogue Number	Description
PUSWV6GKT4	Switch Key Tag Vertical 6 Gang Grid with 4 10AX 16A 250V ac Switches and 2 Blank Plugs Vandal Proof White
PUSWKT	Switch Key Tag Only to Suit PUSWV6GKT4 White

*When ordering **BLACK** product add "**BK**" at end of catalogue number, ie PUSWV6GKT4BK*

Certification Number:
GMA-508434-EA

GSM Electrical (Australia) Pty Ltd
Level 2, 142-144 Fullarton Road, Rose Park SA 5067
P: 1300 301 838 | E: service@gsme.com.au
www.gsme.com.au