PUMA™ VANDALPROOF TRADER®

Vertical Switches

PUSWV1GVP
PUSWV2GVP
PUSWV3GVP
PUSWV4GVP
PUSWV5GVP
PUSWV6GVP

Horizontal Switches

PUSW1GVP
PUSW2GVP
PUSW3GVP
PUSW4GVP
PUSW5GVP
PUSW6GVP

Switch Plates (Less Mechs)

PUSWPV1GVP
PUSWPV2GVP
PUSWPV3GVP
PUSWPV4GVP
PUSWPV5GVP
PUSWPV6GVP
PUSWPVXGVP

See current catalogue for further detail

Cleaning Guide:

Spraying cleaning products on to electrical products is not recommended.

It is important to ensure that switches are turned off before cleaning.

Do not use any cleaning sprays - only wipe down with damp cloth or rub with dry cloth. (Do not use an abrasive cloth as it may scratch the plastic).

Do not use harsh chemical cleaners as these can break down the plastic and cause it to crack.

Vandal Proof Switch Plates

- Switches approved to AS/NZS3133.
- Switches are rated 10AX/16A 250V~ and approved to AS/NZS3133.
- Mech back-up security screws on rear of installed mechs.
- Less Mech plates require security screws (HYSCREWS) to be supplied separately
- Oval screw caps for extra adjustment on wall (no removable cover).
- Fits standard Australian wall boxes and mounting accessories that use 84mm mounting centres.
- Uses brass tunnel terminals that have the screws backed out for easier installation of cabling. Switches are two way with looping terminal and suit 4 x 1.5mm2 cabling with 4.1 bore
- Slotted head screws for the terminals.
- Plates and dollies are made from UV stabilised polycarbonate to avoid discolouring to yellow.
- PUSW1GVP to PUSW3GVP Impact rating IK08 to IEC62262:2002.
- PUSW4GVP to PUSW6GVP Impact rating IK07 to IEC62262:2002
- SBL100W.
- Standard colour is white. Black also stocked - please check availability.
- Plates suit Trader Meerkat MESW mechs, including TV and Data; and Clipsal 30 Style* mechs and accessories.
- Typical example of size seen below:

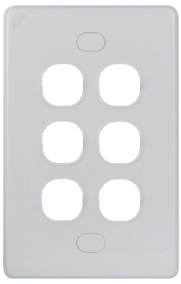

Example of cover plate only / grid and plate only (less mech)

Example of cover plate with MERJ6CM data mech installed

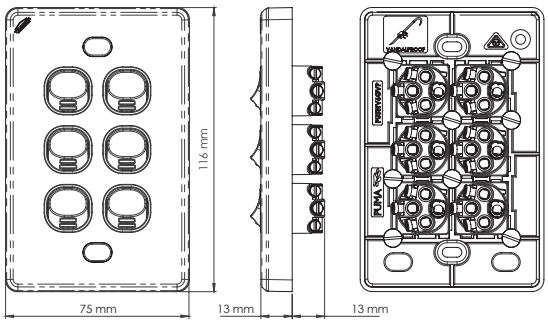

Catalogue No.	Description
PUSW1GVP	Switch Horizontal 1 Gang 10AX 16A 250V ac Vandal Proof White
PUSW2GVP	Switch Horizontal 2 Gang 10AX 16A 250V ac Vandal Proof White
PUSW3GVP	Switch Horizontal 3 Gang 10AX 16A 250V ac Vandal Proof White
PUSW4GVP	Switch Horizontal 4 Gang 10AX 16A 250V ac Vandal Proof White
PUSW5GVP	Switch Horizontal 5 Gang 10AX 16A 250V ac Vandal Proof White
PUSW6GVP	Switch Horizontal 6 Gang 10AX 16A 250V ac Vandal Proof White
PUSWV1GVP	Switch Vertical 1 Gang 10AX 16A 250V ac Vandal Proof White
PUSWV2GVP	Switch Vertical 2 Gang 10AX 16A 250V ac Vandal Proof White
PUSWV3GVP	Switch Vertical 3 Gang 10AX 16A 250V ac Vandal Proof White
PUSWV4GVP	Switch Vertical 4 Gang 10AX 16A 250V ac Vandal Proof White
PUSWV5GVP	Switch Vertical 5 Gang 10AX 16A 250V ac Vandal Proof White
PUSWV6GVP	Switch Vertical 6 Gang 10AX 16A 250V ac Vandal Proof White

Catalogue No.	Description
PUSWPV1GVP	Switch Plate Vertical 1 Gang Less Mech Vandal Proof White
PUSWPV2GVP	Switch Plate Vertical 2 Gang Less Mech Vandal Proof White
PUSWPV3GVP	Switch Plate Vertical 3 Gang Less Mech Vandal Proof White
PUSWPV4GVP	Switch Plate Vertical 4 Gang Less Mech Vandal Proof White
PUSWPV5GVP	Switch Plate Vertical 5 Gang Less Mech Vandal Proof White
PUSWPV6GVP	Switch Plate Vertical 6 Gang Less Mech Vandal Proof White
PUSWPVXGVP	Blank Plate and Cover Vandal Proof White

The above catalogue numbers where "P" appears in number, refers to Cover Plate Only / Grid and Plate only (less mech)

*When ordering **BLACK** product add "**BK**" at end of catalogue number, ie PUSWV1GVPGBK*

* The Clipsal brand and associated products are Trademarks of Schneider Electric (Australia) Pty Ltd.
GSM Electrical (Australia) Pty Ltd, the TRADER brand and it's products, have no endorsement or affiliation with Schneider Electric Pty Ltd.

Certification Number:
GMA-508434-EA

GSM Electrical (Australia) Pty Ltd
5-9 Rundle Street, Kent Town SA 5067
P: 1300 301 838 | E: service@gsme.com.au
www.gsme.com.au

100% AUSTRALIAN OWNED & OPERATED TRADER

10 Yr Warranty TRADER