PUMA™

TRADER®

Vertical Switches

PUSWV1G
PUSWV2G
PUSWV3G
PUSWV4G
PUSWV5G
PUSWV6G

Horizontal Switches

PUSW1G
PUSW2G
PUSW3G
PUSW4G
PUSW5G
PUSW6G

Switch Plates (Less Mechs)

PUSWPV1G
PUSWPV2G
PUSWPV3G
PUSWPV4G
PUSWPV5G
PUSWPV6G
PUSWPVXG

See current catalogue for further detail

Cleaning Guide:

Spraying cleaning products on to electrical products is not recommended.

It is important to ensure that switches are turned off before cleaning.

Do not use any cleaning sprays - only wipe down with damp cloth or rub with dry cloth. (Do not use an abrasive cloth as it may scratch the plastic).

Do not use harsh chemical cleaners as these can break down the plastic and cause it to crack.

Switch Plates

- Switches are rated 10AX/16A 250V~ and approved to AS/NZS3133
- Fits recessed Australian wall boxes and mounting accessories that use 84mm mounting centres
- Uses brass tunnel terminals that have the screws backed out for easier installation of cabling. Switches are two way with looping terminal and suit 4 x 1.5mm2 cabling with 4.1 bore
- Slotted head screws for the terminals
- Covers, plates and dollies are made from UV stabilised polycarbonate to avoid discolouring to yellow
- Standard colour is White. Also available in Matt White, Black, Matt Black & Brushed Aluminium - please check availability
- SBL100W
- Plates suit Trader Meerkat MESW mechs, including TV and Data; and Clipsal 30 Style* mechs and accessories
- Typical example of size seen below:

Example of cover plate only / grid and plate only (less mech)

Example of cover plate with MERJ6CM data mech installed

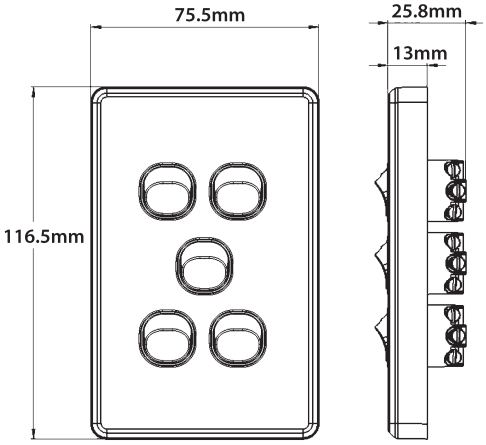

Catalogue No.	Description
PUSW1G	Switch Horizontal 1 Gang 10AX 16A 250V ac White
PUSW2G	Switch Horizontal 2 Gang 10AX 16A 250V ac White
PUSW3G	Switch Horizontal 3 Gang 10AX 16A 250V ac White
PUSW4G	Switch Horizontal 4 Gang 10AX 16A 250V ac White
PUSW5G	Switch Horizontal 5 Gang 10AX 16A 250V ac White
PUSW6G	Switch Horizontal 6 Gang 10AX 16A 250V ac White
PUSWV1G	Switch Vertical 1 Gang 10AX 16A 250V ac White
PUSWV2G	Switch Vertical 2 Gang 10AX 16A 250V ac White
PU WV3G	Switch Vertical 3 Gang 10AX 16A 250V ac White
PUSWV4G	Switch Vertical 4 Gang 10AX 16A 250V ac White
PUSWV5G	Switch Vertical 5 Gang 10AX 16A 250V ac White
PUSWV6G	Switch Vertical 6 Gang 10AX 16A 250V ac White

Catalogue No.	Description
PUSWPV1G	Switch Plate Vertical 1 Gang Less Mech White
PUSWPV2G	Switch Plate Vertical 2 Gang Less Mech White
PUSWPV3G	Switch Plate Vertical 3 Gang Less Mech White
PUSWPV4G	Switch Plate Vertical 4 Gang Less Mech White
PUSWPV5G	Switch Plate Vertical 5 Gang Less Mech White
PUSWPV6G	Switch Plate Vertical 6 Gang Less Mech White
PUSWPVXG	Blank Plate and Cover White

The above catalogue numbers where "P" appears in number, refers to Cover Plate Only / Grid and Plate only (less mech)

*When ordering **BLACK** product add "**BK**" at end of catalogue number, ie PUSWV1GBK*
When ordering BRUSHED ALUMINIUM (cover) add "CBA" at end of catalogue number, ie PUSWV1GCBA
When ordering REPLACEMENT "COVERS ONLY" add "CO" at end of catalogue number, ie PUSWPV1GCO

* The Clipsal brand and associated products are Trademarks of Schneider Electric (Australia) Pty Ltd.
GSM Electrical (Australia) Pty Ltd, the TRADER brand and it's products, have no endorsement or affiliation with Schneider Electric Pty Ltd.

Certification Number:
GMA-508434-EA

GSM Electrical (Australia) Pty Ltd
Level 2, 142-144 Fullarton Road, Rose Park SA 5067
P: 1300 301 838 | E: service@gsme.com.au
www.gsme.com.au

100% AUSTRALIAN OWNED & OPERATED

10 Yr Warranty