PUPP1GCBA
PUPP2GCBA
PUPPSW1GCBA
PUPPSW2GCBA
PUSWDPOV45CBA
PUSWPV1GCBA
PUSWPV2GCBA
PUSWPV3GCBA
PUSWPV4GCBA
PUSWPV5GCBA
PUSWPV6GCBA

See current catalogue for further detail

Brushed Aluminium Covers

- Brushed Aluminium covers provide a great protective upgrade to switches and power points and do not fingerprint as much as other materials while providing a similar look.
- The brushed finish is complemented with the décor of other brushed stainless appliances or looks stylish on other backgrounds.

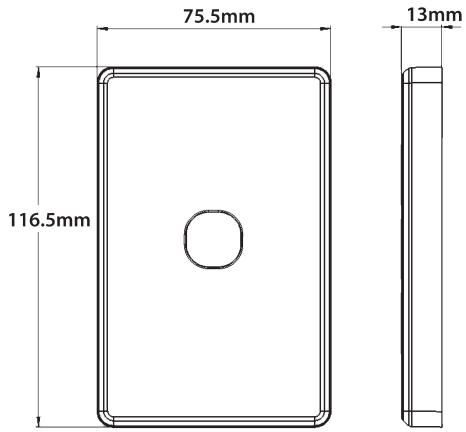

Example of cover plate PUPPSW1GCBA

Example of cover plate with PUPPSW1GCBA with PUPPSW1G

Example of cover plate with PUPPSW1GCBA with PUPPSW1G

Catalogue Number	Description
PUPP1GCBA	Power Point Switched 1 Gang Cover Only Brushed Aluminium
PUPP2GCBA	Power Point Switched 2 Gang Cover Only Brushed Aluminium
PUPPSW1GCBA	Power Point Switched 1 Gang with Extra Switch Cover Only Brushed Aluminium
PUPPSW2GCBA	Power Point Switched 2 Gang with Extra Switch Cover Only Brushed Aluminium
PUSWDPOV45CBA	Switch Oven Double Pole Cover Only Brushed Aluminium
PUSWPV1GCBA	Switch Plate Vertical 1 Gang Cover Only Brushed Aluminium
PUSWPV2GCBA	Switch Plate Vertical 2 Gang Cover Only Brushed Aluminium
PUSWPV3GCBA	Switch Plate Vertical 3 Gang Cover Only Brushed Aluminium
PUSWPV4GCBA	Switch Plate Vertical 4 Gang Cover Only Brushed Aluminium
PUSWPV5GCBA	Switch Plate Vertical 5 Gang Cover Only Brushed Aluminium
PUSWPV6GCBA	Switch Plate Vertical 6 Gang Cover Only Brushed Aluminium

Cleaning Guide:

Spraying cleaning products on to electrical products is not recommended.

It is important to ensure that switches are turned off before cleaning.

Do not use any cleaning sprays - only wipe down with damp cloth or rub with dry cloth. (Do not use an abrasive cloth as it may scratch the plastic).

Do not use harsh chemical cleaners as these can break down the plastic and cause it to crack.

GSM Electrical (Australia) Pty Ltd
Level 2, 142-144 Fullarton Road, Rose Park SA 5067
P: 1300 301 838 | E: service@gsme.com.au
www.gsme.com.au