PUPP2GSK
PUPP2GSK1015

See current catalogue for further detail

Power Point Skirting Mount

- The Double Power Point assembly consists of two single power points that are looped together (loops are included).
- The slim design is ideal for skirting board applications or thin timber panel mounting where space is an issue.
- The styling of the plate aligns with the rest of the PUMA range.
- The power point is only available in single pole format.
- Slim profile of 54mm high.
- Depth into the wall including the wire loops is 26mm.
- 135mm mounting centres.
- Length overall with cover 160mm.
- Variations available (2x 10A) or (1x 10A & 1x 15A)
- Available in White.

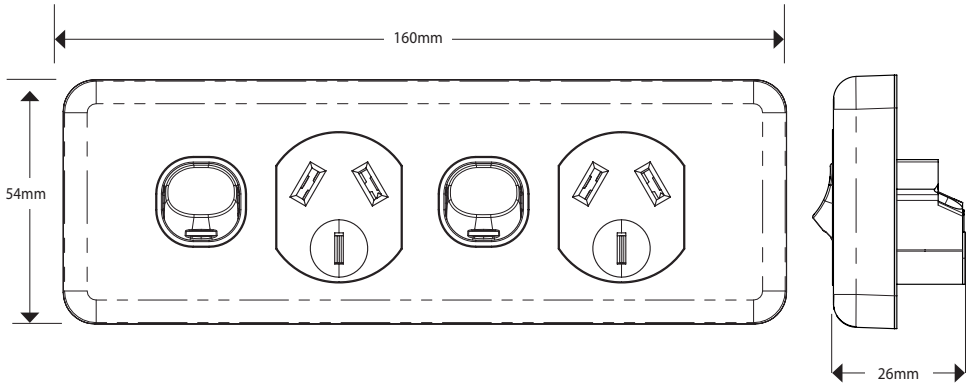

Cleaning Guide:

Spraying cleaning products on to electrical products is not recommended.

It is important to ensure that switches are turned off before cleaning.

Do not use any cleaning sprays - only wipe down with damp cloth or rub with dry cloth. (Do not use an abrasive cloth as it may scratch the plastic).

Do not use harsh chemical cleaners as these can break down the plastic and cause it to crack.

Catalogue Number	Description
PUPP2GSK	Power Point Switched 2 Gang Skirting Mount 10A 250V ac White
PUPP2GSK1015	Power Point Switched 2 Gang Skirting Mount 10A and 15A Sockets 250V ac White

Certification Number:
GMA-509981-EA

GSM Electrical (Australia) Pty Ltd
Level 2, 142-144 Fullarton Road, Rose Park SA 5067
P: 1300 301 838 | E: service@gsme.com.au
www.gsme.com.au

100% AUSTRALIAN OWNED & OPERATED

10 Yr Warranty