TRADER MEDICAT™ PUMA™ VANDALPROOF TRADER®

MCPUPP2GVPCBG

See currrent catalogue for further detail

MEDICAT Puma Vandal Proof Range of Double Power Points

- Power points have Shutters and are Double Pole.
- Oval screw caps for extra adjustment on wall (no removable cover).
- Uses brass tunnel terminals that have the screws backed out for easier installation. of cabling. Power point terminals have 5.7mm bore to suit 4 x 2.5mm^2 cable.
- Fits standard Australian wall boxes and mounting accessories that use 84mm mounting centres.
- Plates and dollies are made from UV stabilised polycarbonate to avoid discolouring.
- Power points achieve IK09 to IEC62262:2002.
- MCPUPP2GVPCBG is Beige marked with 'CLEANING PURPOSES ONLY'.
- Shutter operates from either earth or neutral
- Power points approved to AS/NZS3112.
- Blue base feature to show higher chemical resistance material for hospital environment.
- Typical example of size seen below:

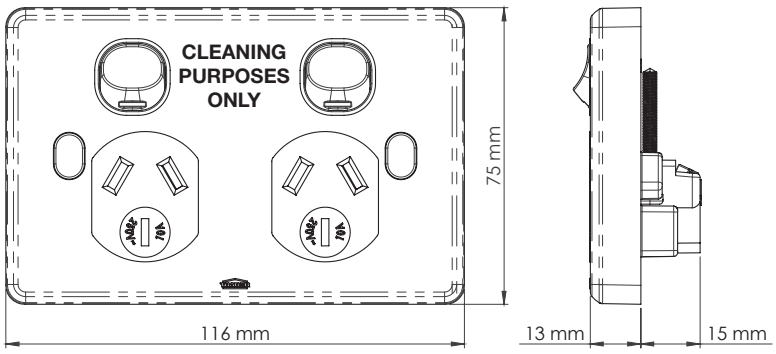

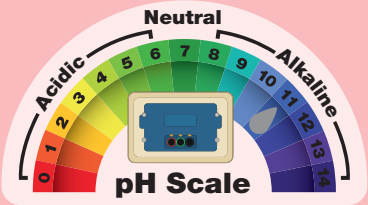

MEDICAL PURPOSES ONLY

Cleaning Guide:

Spraying cleaning products on to electrical products is not recommended.

It is important to ensure that switches are turned off before cleaning.

Do not use any cleaning sprays - only wipe down with damp cloth or rub with dry cloth. (Do not use an abrasive cloth as it may scratch the plastic).

Do not use harsh chemical cleaners as these can break down the plastic and cause it to crack.

Catalogue Number	Description
MCPUPP2GVPCBG	Power Point Switched 2 Gang 10A 250V ac Double Pole Shuttered Vandal Proof CLEANING PURPOSES ONLY Chemical Resistant Beige

Certification Number:
GMA-505204-EA

GSM Electrical (Australia) Pty Ltd
Level 2, 142-144 Fullarton Road, Rose Park SA 5067
P: 1300 301 838 | E: service@gsme.com.au
www.gsme.com.au

100% AUSTRALIAN OWNED & OPERATED TRADER

10 Yr Warranty TRADER