Vertical Switches

LESWV1G
LESWV2G
LESWV3G
LESWV4G
LE SWV5G
LESWV6G

Horizontal Switches

LESW1G
LESW2G
LESW3G
LESW4G
LESW5G
LESW6G

Switch Plates (Less Mechs)

LE SWPV1G
LESWPV2G
LESWPV3G
LESWPV4G
LESWPV5G
LESWPV6G
LE SWPVXG

See current catalogue for further detail

Cleaning Guide:

Spraying cleaning products on to electrical products is not recommended.

It is important to ensure that switches are turned off before cleaning.

Do not use any cleaning sprays - only wipe down with damp cloth or rub with dry cloth. (Do not use an abrasive cloth as it may scratch the plastic).

Do not use harsh chemical cleaners as these can break down the plastic and cause it to crack.

Switch Plates

- Switches are rated 16AX/20A 250V~ and approved to AS/NZS60669-1
- Fits standard Australian wall boxes and mounting accessories that use 84mm mounting centres
- Uses brass tunnel terminals that have the screws backed out for easier installation of cabling. Switches are two way with looping terminal and suit 4 x 1.5mm^2 cabling

with 4.1mm bore

- Slotted head screws for the terminals
- Uses 'Cat Flap' screw covers for IP rating or mounting screws
- Covers, plates and dollies are made from UV stabilised polycarbonate to avoid discolouring to yellow
- Standard colour is white. Black and Brushed Aluminium covers also stocked - please check availability
- Plates suit Trader Meerkat MESWC mechs, including TV and Data; and Clipsal 30 Style* mechs and accessories
- Typical example of size in diagram:

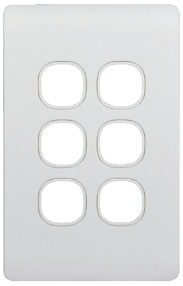

Example of cover plate only / grid and plate only (less mech)

Example of cover plate with MERJ6CM data mech installed

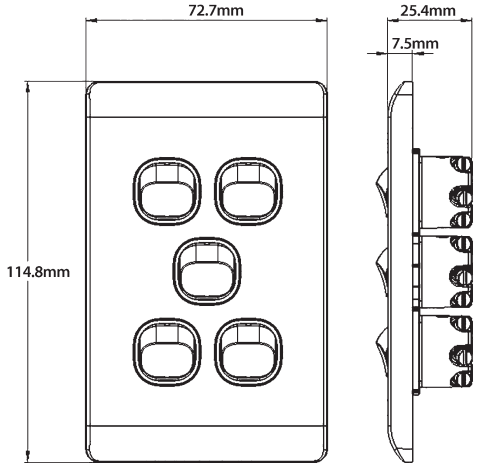

Catalogue No.	Description
LESW1G	Switch Horizontal 1 Gang 10AX 16A 250V ac White
LESW2G	Switch Horizontal 2 Gang 10AX 16A 250V ac White
LESW3G	Switch Horizontal 3 Gang 10AX 16A 250V ac White
LESW4G	Switch Horizontal 4 Gang 10AX 16A 250V ac White
LESW5G	Switch Horizontal 5 Gang 10AX 16A 250V ac White
LESW6G	Switch Horizontal 6 Gang 10AX 16A 250V ac White
LESWV1G	Switch Vertical 1 Gang 10AX 16A 250V ac White
LESWV2G	Switch Vertical 2 Gang 10AX 16A 250V ac White
LESWV3G	Switch Vertical 3 Gang 10AX 16A 250V ac White
LESWV4G	Switch Vertical 4 Gang 10AX 16A 250V ac White
LESWV5G	Switch Vertical 5 Gang 10AX 16A 250V ac White
LESWV6G	Switch Vertical 6 Gang 10AX 16A 250V ac White

Catalogue No.	Description
LESWPV1G	Switch Plate Vertical 1 Gang Less Mech White
LESWPV2G	Switch Plate Vertical 2 Gang Less Mech White
LESWPV3G	Switch Plate Vertical 3 Gang Less Mech White
LESWPV4G	Switch Plate Vertical 4 Gang Less Mech White
LESWPV5G	Switch Plate Vertical 5 Gang Less Mech White
LESWPV6G	Switch Plate Vertical 6 Gang Less Mech White
LESWPVXG	Blank Plate and Cover White

The above catalogue numbers where "P" appears in number, refers to Cover Plate Only / Grid and Plate only (less mech)

*When ordering **BLACK** product add "**BK**" at end of catalogue number, ie LESWV1GBK*

* The Clipsal brand and associated products are Trademarks of Schneider Electric (Australia) Pty Ltd.
GSM Electrical (Australia) Pty Ltd, the TRADER brand and it's products, have no endorsement or affiliation with Schneider Electric Pty Ltd.

Certification Number:
GMA-507879-EA

GSM Electrical (Australia) Pty Ltd
5-9 Rundle Street, Kent Town SA 5067
P: 1300 301 838 | E: service@gsme.com.au
www.gsme.com.au