LEPP2USBAU
LEPP2USBAUCC

See current catalogue for further detail

Dual USB Charger Power Points

LEPP2USBAUCC

- Switch socket rated 10A 250V ac.
- Suitable for USB C applications and performs with the following characteristics:
- Socket: 250 V~; 50 Hz; 10 A;
- USB input: 230 - 240 V~; 50 Hz; max. 0,5 A
- USB-C output: DC 5 V / 3 A; DC 9 V / 3 A; DC 12 V / 2,5 A; DC 15 V / 2 A; DC 20 V / 1,5 A; PD 30 W max.;
- USB-C1 + C2 output: USB-C1: DC 5 V / 3 A; DC 9 V / 2,22 A; DC 12 V / 1,67 A; PD 20 W max. + USB-C2: DC 5 V / 2 A max.
- Socket tested in accordance with AS/NZS 3112.
- USB tested in accordance with IEC61558-2-16 and AS/NZS 61558.1.
- Not suitable for laptops requiring larger power requirement.
- Fits wall boxes and mounting accessories.
- Full cover plate.
- Covers and dollies are made from UV stabilised polycarbonate to avoid discolouring to yellow.
- Standard colour is White. Also available in Black.
- This model does not fit the brushed Aluminium cover that are stocked of similar models.

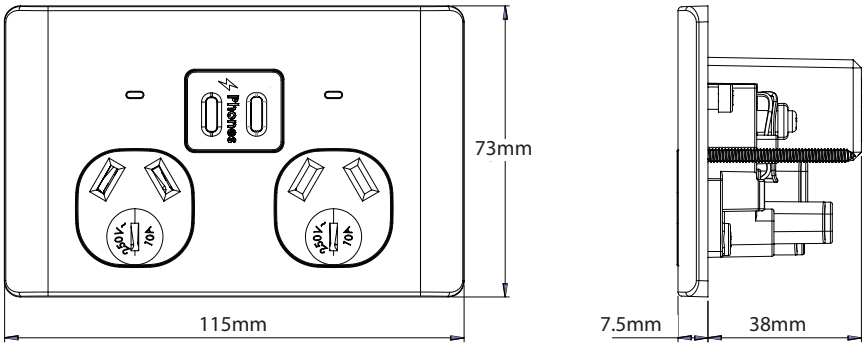

Cleaning Guide:

Spraying cleaning products on to electrical products is not recommended.

It is important to ensure that switches are turned off before cleaning.

Do not use any cleaning sprays - only wipe down with damp cloth or rub with dry cloth. (Do not use an abrasive cloth as it may scratch the plastic).

Do not use harsh chemical cleaners as these can break down the plastic and cause it to crack.



Catalogue Number	Description
LEPP2USBAU	Power Point Auto Switched 2 Gang 10A 250V ac Dual USB Charger Integrated Type A and C PD20W LHS or 5V 3A 18W RHS or Dual 15W White
LEPP2USBAUCC	Power Point Auto Switched 2 Gang 10A 250V ac Dual USB Charger Integrated Type C PD20W LHS and 5V 2A 10W RHS or Single PD30W White

*When ordering **BLACK** product add "**BK**" at end of catalogue number, ie LEPP2USBAUCCBK*

Certification Number:
GMA-528836-EA

GSM Electrical (Australia) Pty Ltd
5-9 Rundle Street, Kent Town SA 5067
P: 1300 301 838 | E: service@gsme.com.au
www.gsme.com.au