LEOPARD™

TRADER®

LEPP1GCBA
LEPPSW1GCBA
LEPP2GCBA
LEPPSW2GCBA
LEPP2USBAUCBA
LESWPV1GCBA
LESWPV2GCBA
LESWPV3GCBA
LESWPV4GCBA
LESWPV5GCBA
LESWPV6GCBA
LESWPVXGCBA

See current catalogue for further detail

Brushed Aluminium Covers

- Brushed Aluminium covers provide a great protective upgrade to switches and power points and do not fingerprint as much as other materials while providing a similar look.
- The brushed finish is complemented with the décor of other brushed stainless appliances or looks stylish on other backgrounds.

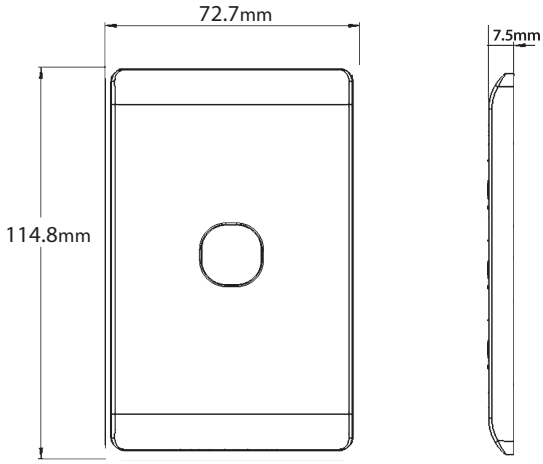

Example of cover plate LEPPSW1GCBA

Example of cover plate with LEPPSW1GCBA with LEPPSWV1G

Example of cover plate with LEPPSW1GCBA with LEPPSWV1GBK

Catalogue Number	Description
LEPP1GCBA	Power Point Switched 1 Gang Cover Only Brushed Aluminium
LEPPSW1GCBA	Power Point Switched 1 Gang with Extra Switch Cover Brushed Aluminium
LEPP2GCBA	Power Point Switched 2 Gang Cover Only Brushed Aluminium
LEPPSW2GCBA	Power Point Switched 2 Gang with Removable Extra Switch Cover Only Brushed Aluminium
LEPP2USBAUCBA	Power Point 2 Gang with Dual USB Cover Only Brushed Aluminium
LESWPV1GCBA	Switch Plate Vertical 1 Gang Cover Only Brushed Aluminium
LESWPV2GCBA	Switch Plate Vertical 2 Gang Cover Only Brushed Aluminium
LESWPV3GCBA	Switch Plate Vertical 3 Gang Cover Only Brushed Aluminium
LESWPV4GCBA	Switch Plate Vertical 4 Gang Cover Only Brushed Aluminium
LESWPV5GCBA	Switch Plate Vertical 5 Gang Cover Only Brushed Aluminium
LESWPV6GCBA	Switch Plate Vertical 6 Gang Cover Only Brushed Aluminium
LESWPVXGCBA	Switch Plate and Cover Brushed Aluminium

Cleaning Guide:

Spraying cleaning products on to electrical products is not recommended.

It is important to ensure that switches are turned off before cleaning.

Do not use any cleaning sprays - only wipe down with damp cloth or rub with dry cloth. (Do not use an abrasive cloth as it may scratch the plastic).

Do not use harsh chemical cleaners as these can break down the plastic and cause it to crack.

GSM Electrical (Australia) Pty Ltd
5-9 Rundle Street, Kent Town SA 5067
P: 1300 301 838 | E: service@gsme.com.au
www.gsme.com.au

100% AUSTRALIAN OWNED & OPERATED

10 Yr Warranty