LEOPARD™

TRADER®

# LEPP2USBAU
# LEPP2USBAUCC

See current catalogue for further detail

# Dual USB Charger Power Points

## LEPP2USBAU

- Wall plate 7.5mm thick to align with other Leopard plates in the range.
- Power points rated to 10A 250V a.c.
- Warm white LED indicators to show power on status.
- USB outlets rated to 3.4A max total at 5V.
- Auto-Switched power point switches active upon plug insertion/withdrawal.
- Each electrical power point contains shutters activated from the neutral pin.
- The USB circuit is integrated with the power point outlet and connected internally so only one set of terminals are required for the electrician to wire the device.
- Fits standard mounting accessories with 84mm centres.
- Terminals suit 3 x 2.5mm$^2$.
- Recommended for phone use or small tablets only, larger devices such as laptops with USB C connections require much greater output.
- Covers, plates and dollies are made from UV stabilised polycarbonate to avoid discolouring to yellow.
- Standard colour is White. Also available in Black.
- Brushed Aluminium Covers (LEPP2USBAUCBA) available.
- Product is approved in accordance with AS/NZS3112.
- USB outlets comply with AS/NZS61558.2.16:2010 A1-3.
- Typical example of size seen below:

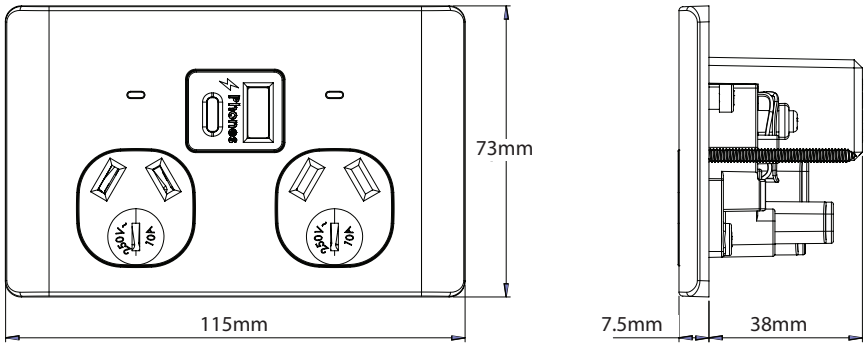


Cleaning Guide:

Spraying cleaning products on to electrical products is not recommended.

It is important to ensure that switches are turned off before cleaning.

Do not use any cleaning sprays - only wipe down with damp cloth or rub with dry cloth. (Do not use an abrasive cloth as it may scratch the plastic).

Do not use harsh chemical cleaners as these can break down the plastic and cause it to crack.

| Catalogue Number | Description |
|---|---|
| LEPP2USBAU | Power Point Auto Switched 2 Gang 10A 250V ac Dual USB Charger Integrated Type A and C PD20W LHS or 5V 3A 18W RHS or Dual 15W White |
| LEPP2USBAUCC | Power Point Auto Switched 2 Gang 10A 250V ac Dual USB Charger Integrated Type C PD20W LHS and 5V 2A 10W RHS or Single PD30W White |

*When ordering **BLACK** product add "**BK**" at end of catalogue number, ie LEPP2USBAUBK*

**Certification Number:**
GMA-528836-EA

**GSM Electrical (Australia) Pty Ltd**
5-9 Rundle Street, Kent Town SA 5067
P: 1300 301 838 | E: service@gsme.com.au
www.gsme.com.au

100% AUSTRALIAN OWNED & OPERATED

2 Yr Warranty