LEOPARD™

TRADER®

LEPP1G
LEPP151G
LEPPSW1G

See current catalogue for further detail

Single Power Points

- Switches approved to AS/NZS3133
- Power point outlets approved to AS/NZS3112
- Fits standard Australian wall boxes and mounting accessories that use 84mm mounting centres
- Uses brass tunnel terminals that have the screws backed out for easier installation of cabling. Power point terminals have 6mm bore to suit 4 x 2.5mm^2 cable. Switch terminals have 4.1mm suit 4 x 1.5mm2
- Combination head screws for the power point terminals
- Uses 'Cat Flap' screw covers for IP rating mounting screws
- Dolly indicator colour green
- Covers, plates and dollies are made from UV stabilised polycarbonate to avoid discolouring to yellow
- Standard colour is white. Black and Brushed Aluminium also stocked - please check availability
- Typical example of size seen below:

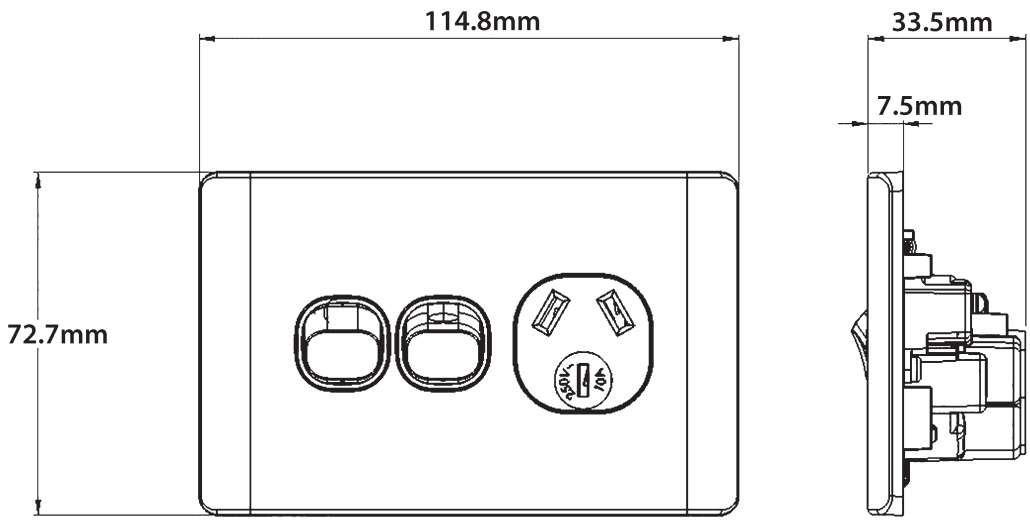

Cleaning Guide:

Spraying cleaning products on to electrical products is not recommended.

It is important to ensure that switches are turned off before cleaning.

Do not use any cleaning sprays - only wipe down with damp cloth or rub with dry cloth. (Do not use an abrasive cloth as it may scratch the plastic).

Do not use harsh chemical cleaners as these can break down the plastic and cause it to crack.

Catalogue Number	Description
LEPP1G	Power Point Switched 1 Gang 10A 250V ac White
LEPP151G	Power Point Switched 1 Gang 15A 250V ac White
LEPPSW1G	Power Point Switched 1 Gang 10A 250V ac with Extra Switch 16AX 20A White

*When ordering **BLACK** product add "**BK**" at end of catalogue number, ie LEPP1GBK*

When ordering REPLACEMENT COVERS ONLY add "CO" at end of catalogue number, ie LEPP1GCO

Certification Number:
GMA-500349-EA
GMA-500347-EA

GSM Electrical (Australia) Pty Ltd
5-9 Rundle Street, Kent Town SA 5067
P: 1300 301 838 | E: service@gsme.com.au
www.gsme.com.au

100% AUSTRALIAN TRADER OWNED & OPERATED

10 Yr Warranty TRADER