HY1GMBH
HY1GMBV
HY1GMBVH
HY1GMBLVH
HY1GMBF
HY1GMBF2
HY1GWBMC
HY1GWBMC13
HY1GWBMC16
HY1GWBMCR
HY1GMBVH
HY1GMBNP
HY1GMBVNP
HY1GMBNPX
HY1GMBVNPX
HY1GMBPL
HY1GMBPLR
HY1GMBGN
HYPBPC

See current catalogue for further detail

Cleaning Guide:

Spraying cleaning products on to electrical products is not recommended.

It is important to ensure that switches are turned off before cleaning.

Do not use any cleaning sprays - only wipe down with damp cloth or rub with dry cloth. (Do not use an abrasive cloth as it may scratch the plastic).

Do not use harsh chemical cleaners as these can break down the plastic and cause it to crack.

Mounting Brackets (Group 2)

- Trader brackets are available for many different construction applications
- They feature 84mm mounting centres with 6/32 UNC standard mounting threads to suit Australian accessories
- The aperture sizes are designed to suit the majority of Australian accessories in the market
- Made from strong durable electro-galvanised zinc steel
- Models available for timber construction, steel frames and brick/masonary applications

HY1GMBNP

HY1GMBVNP

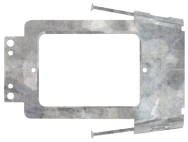

HY1GMBNPX

HY1GMBVNPX

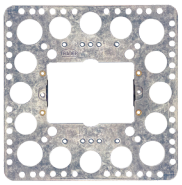

HY1GMBPL

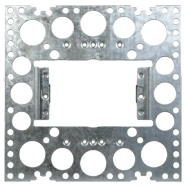

HY1GMBPLR

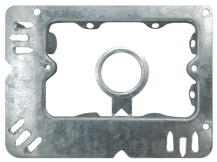

HY1GMBGN

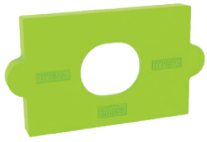

HYPBPC

Catalogue Number	Description
HY1GMBNP	Mounting Bracket Metal 1G Horizontal Nail Plate
HY1GMBVNP	Mounting Bracket Metal 1G Vertical Nail Plate
HY1GMBNPX	Mounting Bracket Metal 1G Horizontal Nail Plate Extra Large
HY1GMBVNPX	Mounting Bracket Metal 1G Vertical Nail Plate Extra Large
HY1GMBPL	Plaster Bracket Metal 1 Gang Vertical or Horizontal
HY1GMBPLR	Plaster Bracket Metal 1 Gang Vertical or Horizontal Recessed Design Suits Flat Cat Range
HY1GMBGN	Mounting Bracket Metal 1G with Gang Nail Fit Off
HYPBPC	Plaster Bracket Plastic Cover for HY1GMBPL and HY1GMBPLR or Equivalents Keep First Fix Clean

GSM Electrical (Australia) Pty Ltd
Level 2, 142-144 Fullarton Road, Rose Park SA 5067
P: 1300 301 838 | E: service@gsme.com.au
www.gsme.com.au

Mounting Brackets (Group 2)

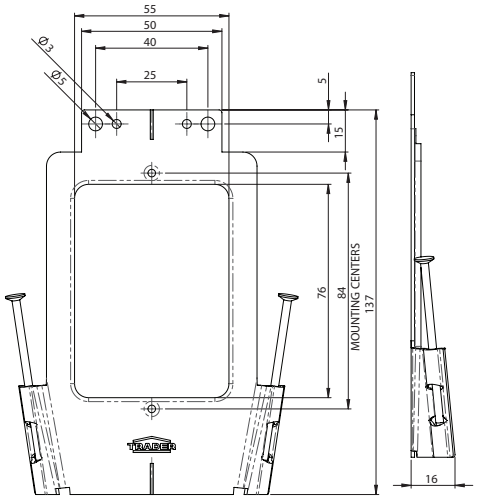

HY1GMBNPX

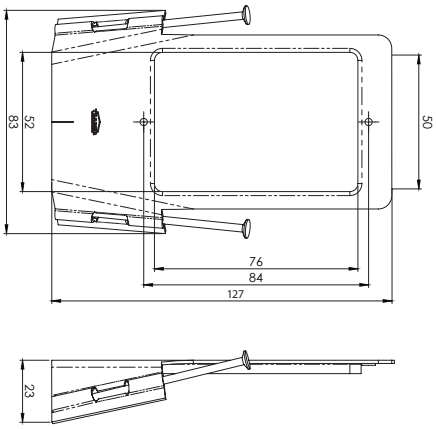

HY1GMBNP

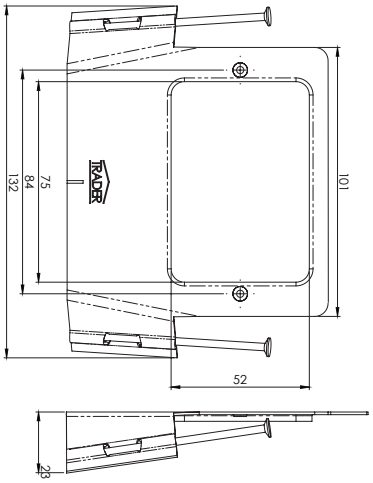

HY1GMBVNP

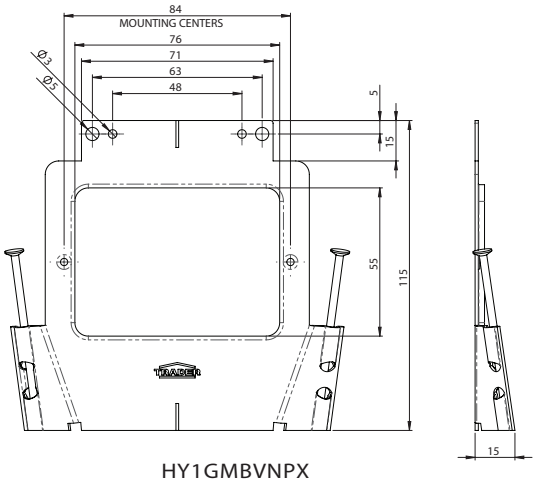

HY1GMBVNPX

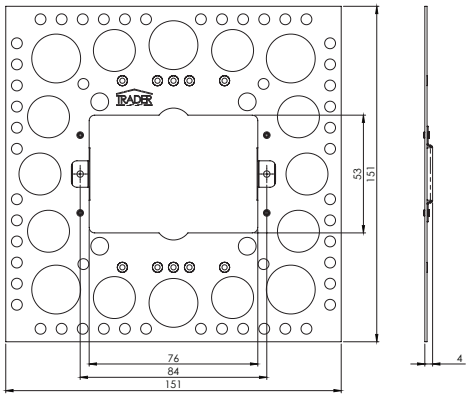

HY1GMBPL

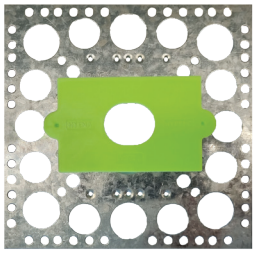

HYPBPC with HY1GMBPL

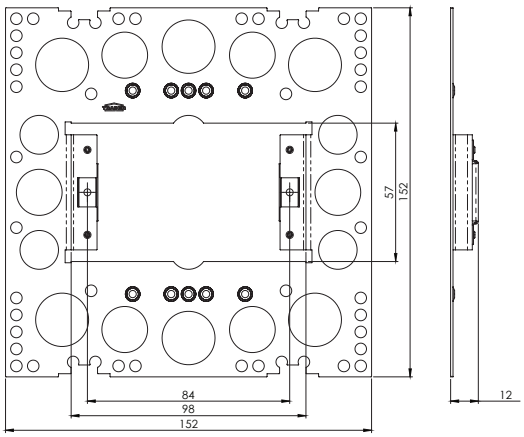

HY1GMBPLR

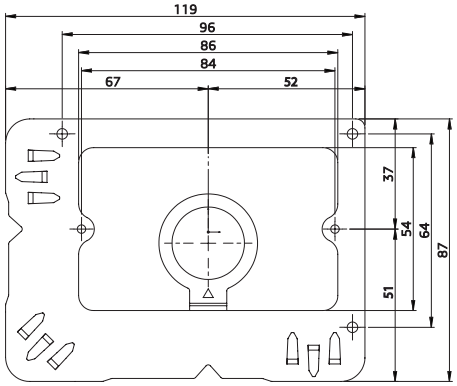

HY1GMBGN