HIPPO™

TRADER®

HPPP2GSC
HPPP2GSCD
HPPP152GSCD

See current catalogue for further detail

Weatherproof Power Point (Separate Circuit)

The HPPP2GSC & HPPP2GSCD is an expansion of the Hippo Range of Power Points that allows two independent switched sockets to be wired in the same enclosure

- 10A & 15A 250V ac rated modular weatherproof sockets with loop wires.
- The Hippo product including dollies, is made from UV Stabilised Polycarbonate to avoid discolouring.
- HPPP2GSCD & HPPP152GSCD are double pole.
- IP54 ideal for prevention against water splashes or harmful objects that may compromise conventional socket outlets. Perfect for use in zone two exterior applications, or damp/ dusty environments - building exteriors, carports, gardens or workshops.
- Styling matches the rest of the Trader Hippo family of products
- Double gang boxes containing 25mm plain and threaded entries.
- Shutter operates from either earth or neutral.
- UV stabilised
- Colour: Grey. HPPP2GSCD & HPPP152GSCD available in Black & Matt Black.
- Can be mounted on the shallow back box series such as the HPPP2GBS and HPSMK2G.
- Other features of the product include the removable caps adjacent to the socket faces that are designed to be replaced with IPA studs for easy circuit identification. This helps to speed up any circuit ID process as the hole positions are available from removing the existing plugs and will maintain the IP54 rating when replaced with the IPA stud.

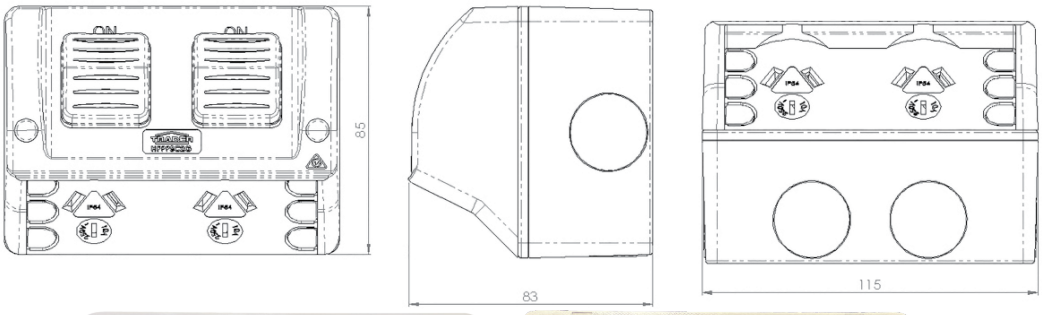

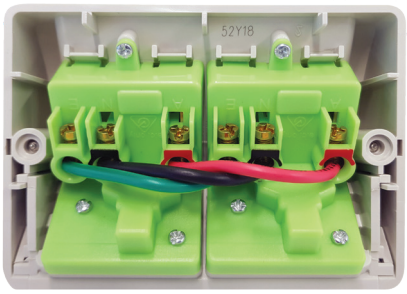

HPPP2GSC

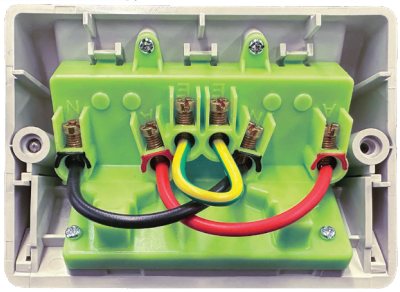

HPPP2GSCD

Catalogue Number	Description
HPPP2GSC	Power Point Weatherproof Double Outlet IP54 10A 250V ac Separate Circuit with IPA Studs Grey
HPPP2GSCD	Power Point Weatherproof Double Outlet IP54 10A 250V ac Separate Circuit Double Pole Grey
HPPP152GSCD	Power Point Weatherproof Double Outlet IP54 15A 250V ac Separate Circuit Double Pole Grey

When ordering BLACK product add "BK" at end of catalogue number, ie HPPP2GSCDBK
When ordering MATT BLACK product add "MBK" at end of catalogue number, ie HPPP2GSCDMBK

Cleaning Guide:

Spraying cleaning products on to electrical products is not recommended.

It is important to ensure that switches are turned off before cleaning.

Do not use any cleaning sprays - only wipe down with damp cloth or rub with dry cloth. (Do not use an abrasive cloth as it may scratch the plastic).

Do not use harsh chemical cleaners as these can break down the plastic and cause it to crack.

Certification Number:
HPPP2GSC: GMA-504800-EA
HPPP2GSCD, HPPP152GSC: GmA-521866-EA

GSM Electrical (Australia) Pty Ltd
5-9 Rundle Street, Kent Town SA 5067
P: 1300 301 838 | E: service@gsme.com.au
www.gsme.com.au

100% AUSTRALIAN OWNED & OPERATED

10 Yr Warranty