HIPPO™

TRADER®

HPISWXL363
HPISWXL463

See current catalogue for further detail

Extra Large Isolators

- Hippo Isolators are tested to AS/NZS3133 and AS/NZS IEC60947-3.
- The Hippo larger enclosures feature twin 40mm & 32mm threaded entries both top and bottom.
- The internal isolator switch modules are base mounted to provide a stable platform for wiring. Examples of the inner modules are pictured below.
- More detail for switches can be seen in the table on following page.
- Packaging lid features cutting template for easy marking out.
- UV stabilised
- Colour: Grey.

The switches feature:

- Combination head terminal screws
- Combination head earth and neutral terminal screws
- Alignment sleeves on switch housing guides screwdriver into terminal screws, reduces screwdriver tips jumping out.
- Terminal bores have plenty of space for wiring (see table for sizes)
- Pad lock

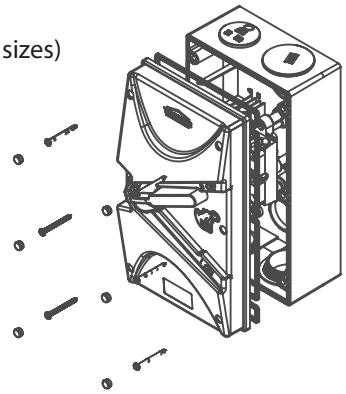

Example of internal 3-pole switch

Example of internal 4-pole switch

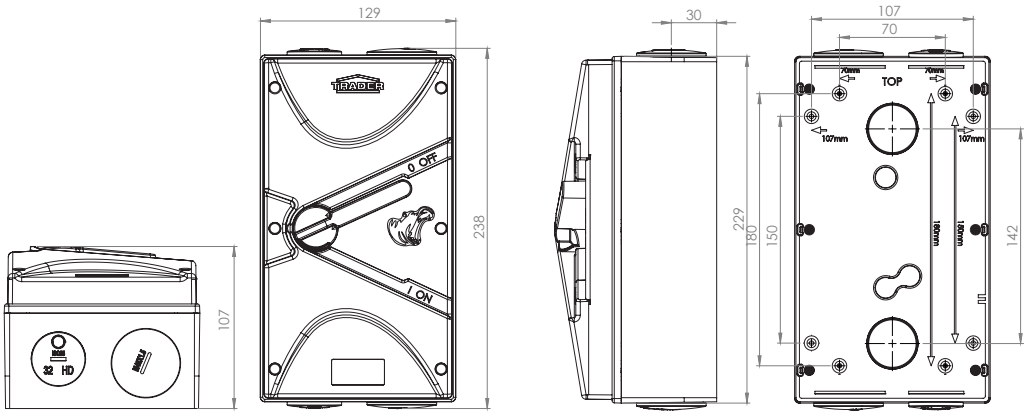

Cleaning Guide:

Spraying cleaning products on to electrical products is not recommended.

It is important to ensure that switches are turned off before cleaning.

Do not use any cleaning sprays - only wipe down with damp cloth or rub with dry cloth. (Do not use an abrasive cloth as it may scratch the plastic).

Do not use harsh chemical cleaners as these can break down the plastic and cause it to crack.

Catalogue Number	Description
HPISWXL363	Isolator Switch Weatherproof IP66 63A 440V ac 3 Pole Extra Large Grey
HPISWXL463	Isolator Switch Weatherproof IP66 63A 440V ac 4 Pole Extra Large Grey

Certification Number:
GMA-516781

GSM Electrical (Australia) Pty Ltd
5-9 Rundle Street, Kent Town SA 5067
P: 1300 301 838 | E: service@gsme.com.au
www.gsme.com.au

100% AUSTRALIAN OWNED & OPERATED

10 Yr Warranty

HIPPO™ TRADER®

HPISWXL363
HPISWXL463

See current catalogue for further detail

Extra Large Isolators

Ratings to IEC60947-3/AS 60947-3 and AS/NZS 3133		
TYPE	3POLE SWITCH DISCONNECTOR	4 POLE SWITCH DISCONNECTOR
Model Number (Check catalogue for availability) HPISWXL***	363	463
Rated Operational Voltage Ue (50Hz)	440V	440V
Rated Insulation Voltage Ui (~50Hz)	690V	
Rated Thermal Current Ith	63A	63A
Rated Short Time Withstand Icw (20Ie)	1.26kA/1s	1.26kA/1s
Rated impulse withstand voltage Uimp (kV)	4.0kV	
Rated short circuit making capacity Icm (28.4Ie)	1.789kA	1.789kA
Motor Rating in accordance with AS/NZS3133	1.789kA	1.789kA
Motor Rating in accordance with AS/NZS3133	M180	
AC21A (Ue:250V~) (Ie=(A))	-	-
(Ue:440V~) (Ie=(A))	63A	63A
Operational Power (Pe) (kW)	41.0kW	41.0kW
(HP)	54.9HP	54.9HP
AC22A (Ue:250V~) (Ie=(A))	-	-
(Ue:440V~) (Ie=(A))	63A	63A
Operational Power (Pe) ((kW)	34.5kW	34.5kW
(HP)	46.2HP	46.2HP
AC23A (Ue:250V~) (Ie=(A))	-	-
(Ue:440V~) (Ie=(A))	63A	63A
Operational Power (Pe) (kW)	28.0kW	28.0kW
(HP)	37.6HP	37.6HP
Rated Duty	Uninterupted	
IP Rating	IP66	
Terminal torque - Recommended (Nm)	2.5Nm	
Minimum Conductor size (mm^2)	16	16
Maximum Conductor size (mm^2)	25	25
Cover screw torque - Recommended (Nm)	0.6Nm	
Earth/Neutral Terminal torque - Recommended (Nm)	2.0Nm	
Terminal bore (Diameter and cross section)	7.6mm suits 25mm^2	
Terminal bore box mounted Earth/Neutral (Diameter and cross section)	6.3mm suits 16mm^2	
Pollution degree	2	
Lock-off padlock size	8.0MM Padlock staple	

Cleaning Guide:

Spraying cleaning products on to electrical products is not recommended.

It is important to ensure that switches are turned off before cleaning.

Do not use any cleaning sprays - only wipe down with damp cloth or rub with dry cloth. (Do not use an abrasive cloth as it may scratch the plastic).

Do not use harsh chemical cleaners as these can break down the plastic and cause it to crack.

Certification Number:
GMA-516781

GSM Electrical (Australia) Pty Ltd
5-9 Rundle Street, Kent Town SA 5067
P: 1300 301 838 | E: service@gsme.com.au
www.gsme.com.au

100% AUSTRALIAN OWNED & OPERATED TRADER

10 Yr Warranty TRADER