HIPPO
CHEMICAL RESISTANT
WHITE FOR ACIDIC

TRADER®

HPISWL120RW
HPISWL140RW
HPISWL163RW
HPISWL220RW
HPISWL240RW
HPISWL263RW
HPISWL320RW
HPISWL340RW
HPISWL363RW
HPISWL420RW
HPISWL440RW
HPISWL463RW

See current catalogue for further detail

Example of internal 1-pole switch

Example of internal 2-pole switch

Example of internal 3-pole switch

Example of internal 4-pole switch

Cleaning Guide:

Spraying cleaning products on to electrical products is not recommended.

It is important to ensure that switches are turned off before cleaning.

Do not use any cleaning sprays - only wipe down with damp cloth or rub with dry cloth. (Do not use an abrasive cloth as it may scratch the plastic).

Do not use harsh chemical cleaners as these can break down the plastic and cause it to crack.

Large Isolators

- Hippo Isolators are tested to AS/NZS3133 and AS/NZS IEC60947-3.
- The Hippo larger enclosures feature twin 25mm threaded entries both top and bottom.
- The internal isolator switch modules are base mounted to provide a stable platform for wiring. Examples of the inner modules are pictured below.
- More detail for switches can be seen in the table on following page.
- Packaging lid features cutting template for easy marking out.
- UV stabilised
- Colour: White.
- Chemical Resistant White for Acid Applications.

The switches feature:

- Combination head terminal screws
- Combination head earth and neutral terminal screws
- Alignment sleeves on switch housing guides screwdriver into terminal screws, reduces screwdriver tips jumping out.
- Terminal bores have plenty of space for wiring (see table for sizes)
- Pad lock

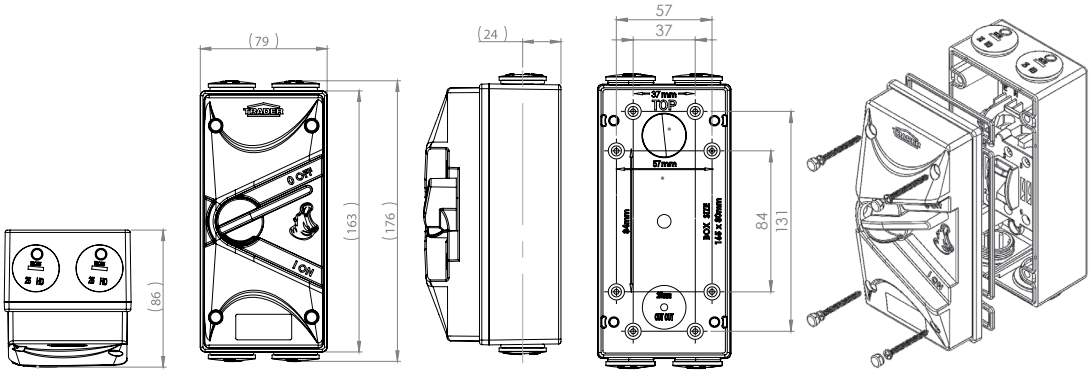

Catalogue Number	Description
HPISWL120RW	Isolator Switch Weatherproof IP66 20A 250V ac 1 Pole Large Chemical Resistant White
HPISWL140RW	Isolator Switch Weatherproof IP66 40A 250V ac 1 Pole Large Chemical Resistant White
HPISWL163RW	Isolator Switch Weatherproof IP66 63A 250V ac 1 Pole Large Chemical Resistant White
HPISWL220RW	Isolator Switch Weatherproof IP66 20A 440V ac 2 Pole Large Chemical Resistant White
HPISWL240RW	Isolator Switch Weatherproof IP66 40A 440V ac 2 Pole Large Chemical Resistant White
HPISWL263RW	Isolator Switch Weatherproof IP66 63A 440V ac 2 Pole Large Chemical Resistant White
HPISWL320RW	Isolator Switch Weatherproof IP66 20A 440V ac 3 Pole Large Chemical Resistant White
HPISWL340RW	Isolator Switch Weatherproof IP66 40A 440V ac 3 Pole Large Chemical Resistant White
HPISWL363RW	Isolator Switch Weatherproof IP66 63A 440V ac 3 Pole Large Chemical Resistant White
HPISWL420RW	Isolator Switch Weatherproof IP66 20A 440V ac 4 Pole Large Chemical Resistant White
HPISWL440RW	Isolator Switch Weatherproof IP66 40A 440V ac 4 Pole Large Chemical Resistant White
HPISWL463RW	Isolator Switch Weatherproof IP66 63A 440V ac 4 Pole Large Chemical Resistant White

Certification Number:
HPISWL120RW, HPISWL220RW, HPISWL320RW, HPISWL420RW: GMA-516768-EA
HPISWL140RW, HPISWL163RW, HPISWL240RW, HPISWL263RW, HPISWL340RW, HPISWL363RW, HPISWL440RW, HPISWL463RW: GMA-516781

GSM Electrical (Australia) Pty Ltd
Level 2, 142-144 Fullarton Road, Rose Park SA 5067
P: 1300 301 838 | E: service@gsme.com.au
www.gsme.com.au

100% AUSTRALIAN OWNED & OPERATED

10 Yr Warranty

Large Isolators

Ratings to IEC60947-3/AS 60947-3 and AS/NZS 3133												
TYPE	1 POLE SWITCH DISCONNECTOR			2 POLE SWITCH DISCONNECTOR			3POLE SWITCH DISCONNECTOR			4 POLE SWITCH DISCONNECTOR		
Model Number (Check catalogue for availability) HPISWL***	120	140	163	220	240	263	320	340	363	420	440	463
Rated Operational Voltage Ue (50Hz)	250V			440V			440V			440V		
Rated Insulation Voltage Ui (~50Hz)	690V											
Rated Thermal Current Ith	20A	40A	63A	20A	40A	63A	20A	40A	63A	20A	40A	63A
Rated Short Time Withstand Icw (20Ie)	400A/1s	800A/1s	1.26kA/1s	400A/1s	800A/1s	1.26kA/1s	400A/1s	800A/1s	1.26kA/1s	400A/1s	800A/1s	1.26kA/1s
Rated impulse withstand voltage Uimp (kV)	4.0kV											
Rated short circuit making capacity Icm (28.4Ie)	568A	1.136kA	1.789kA	568A	1.136kA	1.789kA	568A	1.136kA	1.789kA	568A	1.136kA	1.789kA
Motor Rating in accordance with AS/NZS3133	568A	1.136kA	1.789kA	568A	1.136kA	1.789kA	568A	1.136kA	1.789kA	568A	1.136kA	1.789kA
Motor Rating in accordance with AS/NZS3133	M180											
AC21A (Ue:250V~) (Ie=(A))	20A	40A	63A	-	-	-	-	-	-	-	-	-
(Ue:440V~) (Ie=(A))	-	-	-	20A	40A	63A	20A	40A	63A	20A	40A	63A
Operational Power (Pe) (kW)	4.2kW	8.5kW	13.4kW	13.0kW	26.0kW	41.0kW	13.0kW	26.0kW	41.0kW	13.0kW	26.0kW	41.0kW
(HP)	5.7HP	11.4HP	18.0HP	17.4HP	34.9HP	54.9HP	17.4HP	34.9HP	54.9HP	17.4HP	34.9HP	54.9HP
AC22A (Ue:250V~) (Ie=(A))	20A	40A	63A	-	-	-	-	-	-	-	-	-
(Ue:440V~) (Ie=(A))	-	-	-	20A	40A	63A	20A	40A	63A	20A	40A	63A
Operational Power (Pe) ((kW)	3.6kW	7.2kW	11.3kW	10.9kW	21.9kW	34.5kW	10.9kW	21.9kW	34.5kW	10.9kW	21.9kW	34.5kW
(HP)	4.8HP	9.6HP	15.2HP	14.7HP	29.3HP	46.2HP	14.7HP	29.3HP	46.2HP	14.7HP	29.3HP	46.2HP
AC23A (Ue:250V~) (Ie=(A))	20A	40A	63A	-	-	-	-	-	-	-	-	-
(Ue:440V~) (Ie=(A))	-	-	-	20A	40A	63A	20A	40A	63A	20A	40A	63A
Operational Power (Pe) (kW)	2.9kW	5.8kW	9.2kW	8.9kW	17.8kW	28.0kW	8.9kW	17.8kW	28.0kW	8.9kW	17.8kW	28.0kW
(HP)	3.9HP	7.8HP	12.3HP	11.9HP	23.85HP	37.6HP	11.9HP	23.85HP	37.6HP	11.9HP	23.85HP	37.6HP
Rated Duty	Uninterupted											
IP Rating	IP66											
Terminal torque - Recommended (Nm)	2.5Nm											
Minimum Conductor size (mm^2)	2.5	10	16	2.5	10	16	2.5	10	16	2.5	10	16
Maximum Conductor size (mm^2)	25	25	25	25	25	25	25	25	25	25	25	25
Cover screw torque - Recommended (Nm)	0.6Nm											
Earth/Neutral Terminal torque - Recommended (Nm)	2.0Nm											
Terminal bore (Diameter and cross section)	7.6mm suits $25mm^2$											
Terminal bore box mounted Earth/Neutral (Diameter and cross section)	6.3mm suits $16mm^2$											
Pollution degree	2											
Lock-off padlock size	8.0MM Padlock staple											

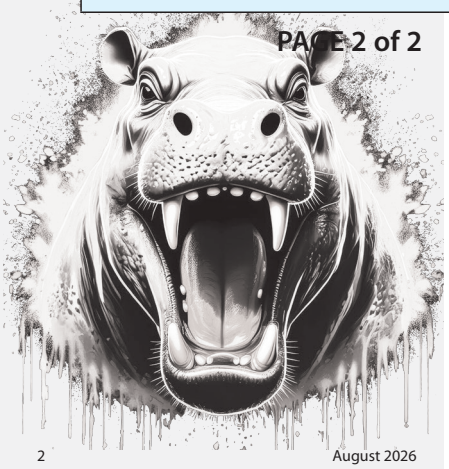

Certification Number:
HPISWL120RW, HPISWL220RW, HPISWL320RW, HPISWL420RW: GMA-516768-EA
HPISWL140RW, HPISWL163RW, HPISWL240RW, HPISWL263RW, HPISWL340RW,
HPISWL363RW, HPISWL440RW, HPISWL463RW: GMA-516781

GSM Electrical (Australia) Pty Ltd
Level 2, 142-144 Fullarton Road, Rose Park SA 5067
P: 1300 301 838 | E: service@gsme.com.au
www.gsme.com.au