Vertical Switches

FLSWV1G
FLSWV2G
FLSWV3G
FLSWV4G
FLSWV5G
FLSWV6G

Horizontal Switches

FLSW1G
FLSW2G
FLSW3G
FLSW4G
FLSW5G
FLSW6G

Switch Plates (Less Mechs)

FLSWPV1G
FLSWPV2G
FLSWPV3G
FLSWPV4G
FLSWPV5G
FLSWPV6G
FLSWPVXG

See current catalogue for further detail

Cleaning Guide:

Spraying cleaning products on to electrical products is not recommended.

It is important to ensure that switches are turned off before cleaning.

Do not use any cleaning sprays - only wipe down with damp cloth or rub with dry cloth. (Do not use an abrasive cloth as it may scratch the plastic).

Do not use harsh chemical cleaners as these can break down the plastic and cause it to crack.

Switch Plates

- Switches are rated 10AX/16A 250V~ and approved to AS/NZS3133
- Fits recessed Australian wall boxes and mounting accessories that use 84mm mounting centres
- Uses brass tunnel terminals that have the screws backed out for easier installation of cabling. Switches are two way with looping terminal and suit 4 x 1.5mm2 cabling with 4.1 bore
- Slotted head screws for the terminals
- Covers, plates and dollies are made from UV stabilised polycarbonate to avoid discolouring to yellow
- Standard colour is White. Also available in Matt White, Black, Matt Black & Brushed Aluminium - please check availability
- SBL100W
- Plates suit Trader Meerkat MESW mechs, including TV and Data; and Clipsal 30 Style* mechs and accessories
- Typical example of size seen below:

Example of cover plate only / grid and plate only (less mech)

Example of cover plate with MERJ6CM data mech installed

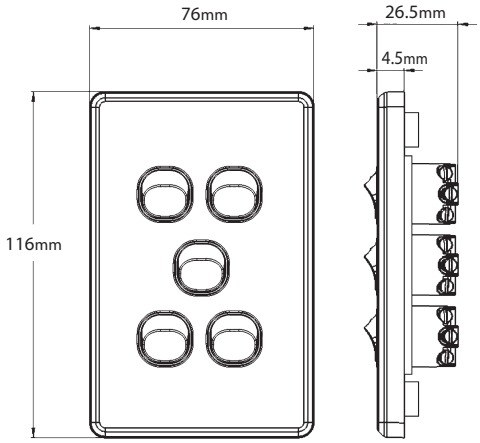

Catalogue No.	Description
FLSW1G	Switch Horizontal 1 Gang 10AX 16A 250V ac White
FLSW2G	Switch Horizontal 2 Gang 10AX 16A 250V ac White
FLSW3G	Switch Horizontal 3 Gang 10AX 16A 250V ac White
FLSW4G	Switch Horizontal 4 Gang 10AX 16A 250V ac White
FLSW5G	Switch Horizontal 5 Gang 10AX 16A 250V ac White
FLSW6G	Switch Horizontal 6 Gang 10AX 16A 250V ac White
FLSWV1G	Switch Vertical 1 Gang 10AX 16A 250V ac White
FLSWV2G	Switch Vertical 2 Gang 10AX 16A 250V ac White
FLSWV3G	Switch Vertical 3 Gang 10AX 16A 250V ac White
FLSWV4G	Switch Vertical 4 Gang 10AX 16A 250V ac White
FLSWV5G	Switch Vertical 5 Gang 10AX 16A 250V ac White
FLSWV6G	Switch Vertical 6 Gang 10AX 16A 250V ac White

Catalogue No.	Description
FLSWPV1G	Switch Plate Vertical 1 Gang Less Mech White
FLSWPV2G	Switch Plate Vertical 2 Gang Less Mech White
FLSWPV3G	Switch Plate Vertical 3 Gang Less Mech White
FLSWPV4G	Switch Plate Vertical 4 Gang Less Mech White
FLSWPV5G	Switch Plate Vertical 5 Gang Less Mech White
FLSWPV6G	Switch Plate Vertical 6 Gang Less Mech White
FLSWPVXG	Blank Plate and Cover White

The above catalogue numbers where "P" appears in number, refers to Cover Plate Only / Grid and Plate only (less mech)

*When ordering **BLACK** product add "**BK**" at end of catalogue number, ie FLSWV1GBK*

*When ordering **MATT BLACK** product add "**MBK**" at end of catalogue number, ie FLSWV1GBK*

*When ordering **MATT WHITE** product add "**MW**" at end of catalogue number, ie FLSWV1GMW*

* The Clipsal brand and associated products are Trademarks of Schneider Electric (Australia) Pty Ltd.
GSM Electrical (Australia) Pty Ltd, the TRADER brand and it's products, have no endorsement or affiliation with Schneider Electric Pty Ltd.

Certification Number:
GMA-508434-EA

GSM Electrical (Australia) Pty Ltd
5-9 Rundle Street, Kent Town SA 5067
P: 1300 301 838 | E: service@gsme.com.au
www.gsme.com.au