PUMA™

TRADER®

PUPP1G
PUPP151G
PUPP201G
PUPPSW1G
PUPPV1G
PUPP1GL

See current catalogue for further detail

Single Power Points

- Uses brass tunnel terminals that have the screws backed out for easier installation of cabling. Power point terminals have 5.7mm bore to suit 4 x 2.5mm2 cable.
- Fits standard Australian wall boxes and mounting accessories that use 84mm mounting centres.
- Covers, plates and dollies are made from UV stabilised polycarbonate to avoid discolouring to yellow.
- Standard colour is white. Black also stocked - please check availability.
- Switches approved to AS/NZS3133.
- Power points approved to AS/NZS3112.
- Typical example of size seen below:

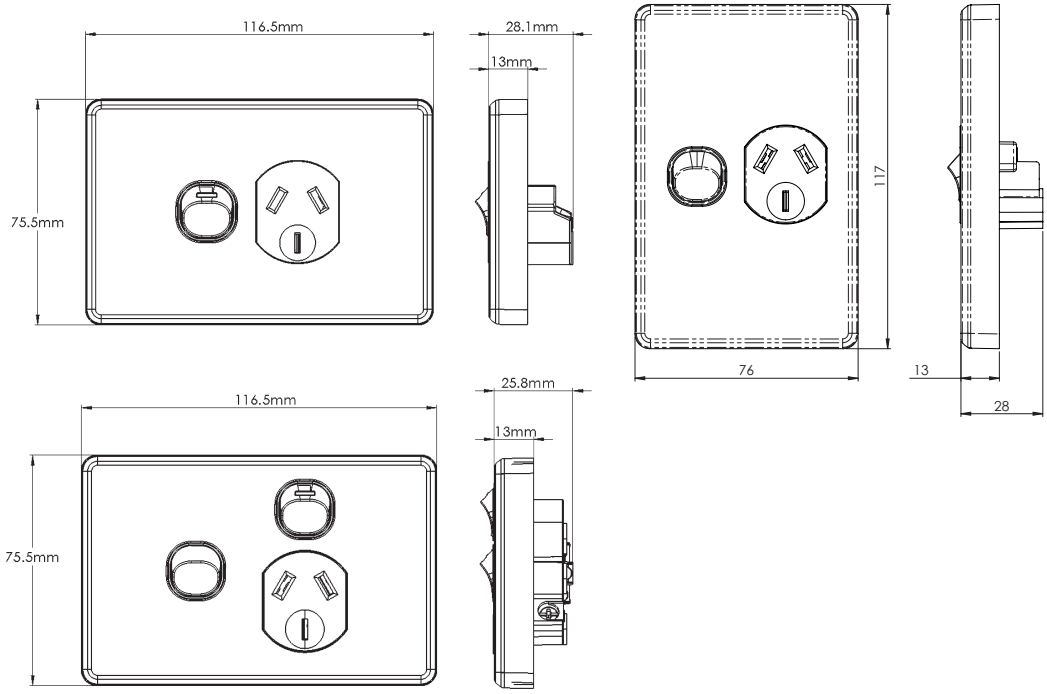

Catalogue Number	Description
PUPP1G	Power Point Switched 1 Gang 10A 250V ac White
PUPP151G	Power Point Switched 1 Gang 15A 250V ac White
PUPP201G	Power Point Switched 1 Gang 20A 250V ac White
PUPPSW1G	Power Point Switched 1 Gang 10A 250V ac with Extra Switch 10AX 16A White
PUPPV1G	Power Point Switched Vertical 1 Gang 10A 250V ac White
PUPP1GL	Power Point Switched 1 Gang 10A 250V ac with Lighting Pin White

When ordering BLACK product add "BK" at end of catalogue number, ie PUPP1GBK
When ordering BRUSHED ALUMINIUM (cover) add "CBA" at end of catalogue number, ie PUPP1GCBA

When ordering REPLACEMENT "COVERS ONLY" add "CO" at end of catalogue number, ie PUPP1GCO

Certification Number:
PUPP1G: GMA-509981-EA
PUPP151G: GMA-509981-EA
PUPPSW1G: GMA-501109-EA
PUPPV1G: GMA-501807-EA

Cleaning Guide:

Spraying cleaning products on to electrical products is not recommended.

It is important to ensure that switches are turned off before cleaning.

Do not use any cleaning sprays - only wipe down with damp cloth or rub with dry cloth. (Do not use an abrasive cloth as it may scratch the plastic).

Do not use harsh chemical cleaners as these can break down the plastic and cause it to crack.

June 2026

GSM Electrical (Australia) Pty Ltd
Level 2, 142-144 Fullarton Road, Rose Park SA 5067
P: 1300 301 838 | E: service@gsme.com.au
www.gsme.com.au

100% AUSTRALIAN OWNED & OPERATED

10 Yr Warranty

PUMA™ TRADER®

PUPP1GAU

See current catalogue for further detail

Single Power Points (Auto Switched)

- Uses brass terminals that have the screws backed out for easier installation of cabling. Power point terminals have Square wrapped terminals to suit 4 x 2.5mm2 cable.
- Fits standard Australian wall boxes and mounting accessories that use 84mm mounting centres.
- Covers, plates and dollies are made from UV stabilised polycarbonate to avoid discolouring to yellow.
- Standard colour is white. Black also stocked - please check availability.
- Power points approved to AS/NZS3112.
- Active is auto switched.
- Shuttered.
- Typical example of size seen below:

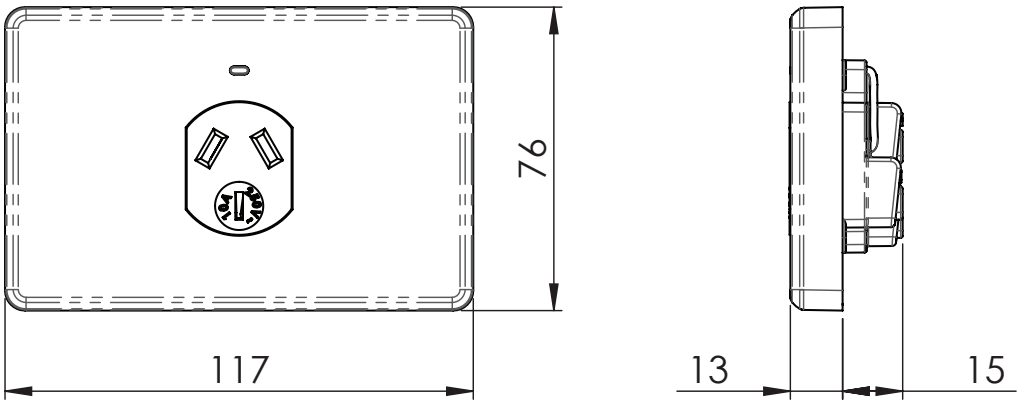

Cleaning Guide:

Spraying cleaning products on to electrical products is not recommended.

It is important to ensure that switches are turned off before cleaning.

Do not use any cleaning sprays - only wipe down with damp cloth or rub with dry cloth. (Do not use an abrasive cloth as it may scratch the plastic).

Do not use harsh chemical cleaners as these can break down the plastic and cause it to crack.

Catalogue Number	Description
PUPP1GAU	Power Point Auto Switched 1 Gang 10A 250V ac White

When ordering BLACK product add "BK" at end of catalogue number, ie PUPP1GBK

Certification Number:
GMA-511520-EA

GSM Electrical (Australia) Pty Ltd
Level 2, 142-144 Fullarton Road, Rose Park SA 5067
P: 1300 301 838 | E: service@gsme.com.au
www.gsme.com.au

100% AUSTRALIAN OWNED & OPERATED

10 Yr Warranty TRADER

PUMA™ TRADER®

PUSO321G

See current catalogue for further detail

Single Power Points (Unswitched)

- Uses brass terminals that have the screws backed out for easier installation of cabling. Terminals suit 6mm² cable.
- Fits standard Australian wall boxes and mounting accessories that use 84mm mounting centres.
- Covers, plates and dollies are made from UV stabilised polycarbonate to avoid discolouring to yellow.
- Standard colour is white.
- Puma unswitched wall socket compliant to AS/NZS3112.
- 32A 250V ac rating
- NOTE: this is not a auto switched socket so must be linked to a control switch.
- Designed for use and linking for control with TRADER large capacity switches such as the MESW32 or PUSWDPV45 series where connection to small appliances is required.
- Typical example of size seen below:

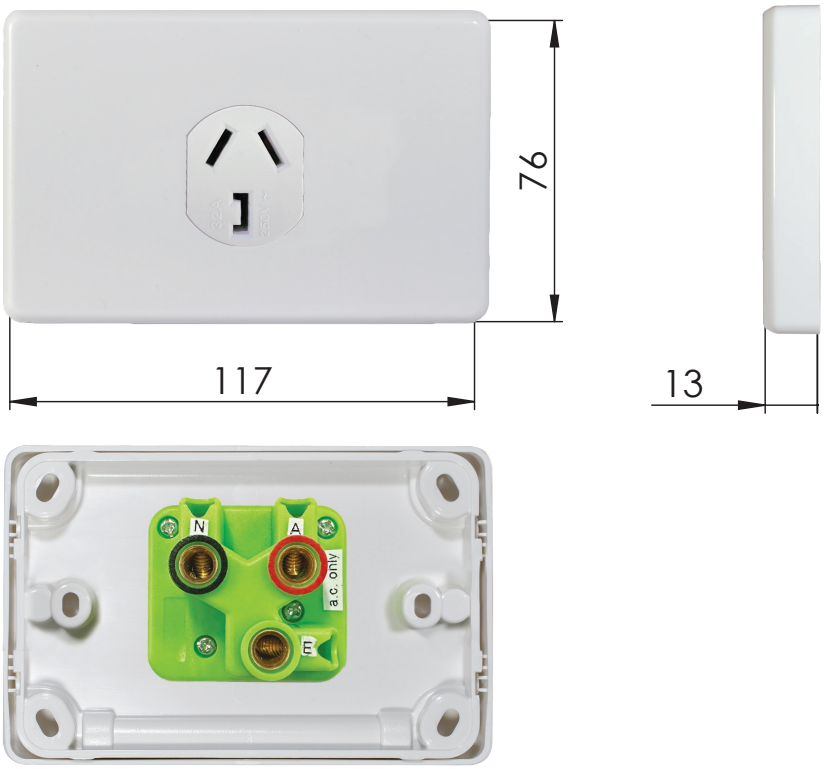

Catalogue Number	Description
PUSO321G	Power Point Unswitched 1 Gang 32A 250V ac White

Cleaning Guide:

Spraying cleaning products on to electrical products is not recommended.

It is important to ensure that switches are turned off before cleaning.

Do not use any cleaning sprays - only wipe down with damp cloth or rub with dry cloth. (Do not use an abrasive cloth as it may scratch the plastic).

Do not use harsh chemical cleaners as these can break down the plastic and cause it to crack.

Certification Number:
GMA-519321

GSM Electrical (Australia) Pty Ltd
Level 2, 142-144 Fullarton Road, Rose Park SA 5067
P: 1300 301 838 | E: service@gsme.com.au
www.gsme.com.au

100% AUSTRALIAN OWNED & OPERATED

10 Yr Warranty

PUMA™ TRADER®

PUPP2G
PUPP152G
PUPPSW2G
PUPPSWX2G
PUPPV2G

See current catalogue for further detail

Double Power Points

- Switches approved to AS/NZS3133
- Power points approved to AS/NZS3112
- Uses brass tunnel terminals that have the screws backed out for easier installation of cabling. Power point terminals have 5.7mm bore to suit 4 x 2.5mm^2 cable.
- Fits standard Australian wall boxes and mounting accessories that use 84mm mounting centres.
- Covers, plates and dollies are made from UV stabilised polycarbonate to avoid discolouring to yellow.
- Standard colour is white. Black also stocked - please check availability.
- Typical example of size seen below:

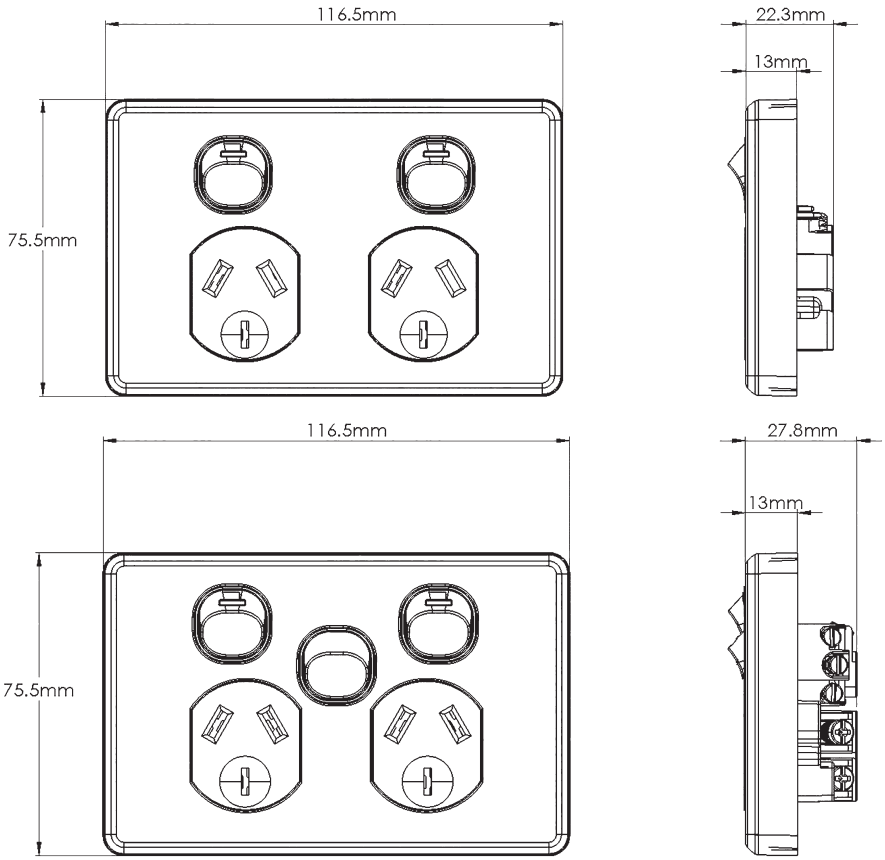

Catalogue Number	Description
PUPP2G	Power Point Switched 2 Gang 10A 250V ac White
PUPP152G	Power Point Switched 2 Gang 15A 250V ac White
PUPPSW2G	Power Point Switched 2 Gang 10A 250V ac with Extra Switch 10AX 16A White
PUPPSWX2G	Power Point Switched 2 Gang 10A 250V ac with Extra Switch Less Mech White
PUPPV2G	Power Point Switched Vertical 2 Gang 10A 250V ac White

When ordering BLACK product add "BK" at end of catalogue number, ie PUPP2GBK
When ordering BRUSHED ALUMINIUM (cover) add "CBA" at end of catalogue number, ie PUPP2GCBA
When ordering REPLACEMENT "COVERS ONLY" add "CO" at end of catalogue number, ie PUPP2GCO

Certification Number:
PUPP2G: GMA-508660-EA
PUPP152G: GMA-500830- EA
PUPPSW2G: GMA-501260-EA
PUPPV2G: GMA-501806-EA

Cleaning Guide:

Spraying cleaning products on to electrical products is not recommended.

It is important to ensure that switches are turned off before cleaning.

Do not use any cleaning sprays - only wipe down with damp cloth or rub with dry cloth. (Do not use an abrasive cloth as it may scratch the plastic).

Do not use harsh chemical cleaners as these can break down the plastic and cause it to crack.

GSM Electrical (Australia) Pty Ltd
Level 2, 142-144 Fullarton Road, Rose Park SA 5067
P: 1300 301 838 | E: service@gsme.com.au
www.gsme.com.au

100% AUSTRALIAN OWNED & OPERATED

10 Yr Warranty

PUMA™ TRADER®

PUPP2GEF

See current catalogue for further detail

Double Power Points Easy Fit

- Switches approved to AS/NZS3133
- Power points approved to AS/NZS3112
- Uses brass tunnel terminals that have the screws backed out for easier installation of cabling. Power point terminals have 5.7mm bore to suit 4 x 2.5mm^2 cable.
- Fits standard Australian wall boxes and mounting accessories that use 84mm mounting centres.
- Covers, plates and dollies are made from UV stabilised polycarbonate to avoid discolouring to yellow.
- Standard colour is white.
- Easy Fit Backletless Mounting with springs.
- Typical example of size seen below:

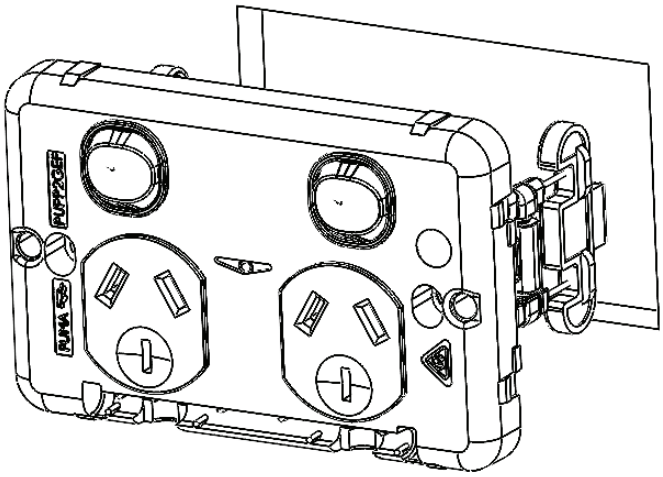

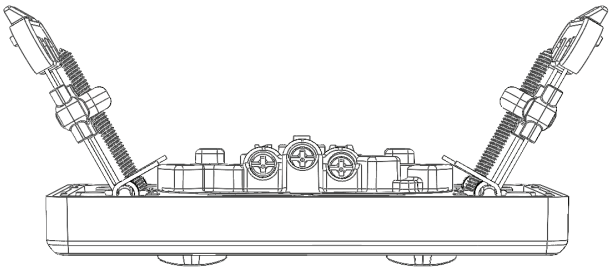

Cleaning Guide:

Spraying cleaning products on to electrical products is not recommended.

It is important to ensure that switches are turned off before cleaning.

Do not use any cleaning sprays - only wipe down with damp cloth or rub with dry cloth. (Do not use an abrasive cloth as it may scratch the plastic).

Do not use harsh chemical cleaners as these can break down the plastic and cause it to crack.

Catalogue Number	Description
PUPP2GEF	Power Point Switched 2 Gang 10A 250V Easy Fit Bracketless Mounting White

Certification Number:
GMA-508660-EA

GSM Electrical (Australia) Pty Ltd
Level 2, 142-144 Fullarton Road, Rose Park SA 5067
P: 1300 301 838 | E: service@gsme.com.au
www.gsme.com.au

100% AUSTRALIAN OWNED & OPERATED

10 Yr Warranty

PUMA™ TRADER®

PUPP2GAU

See current catalogue for further detail

Double Power Points (Auto Switched)

- Uses brass terminals that have the screws backed out for easier installation of cabling. Power point terminals have Square wrapped terminals to suit 4 x 2.5mm2 cable.
- Fits standard Australian wall boxes and mounting accessories that use 84mm mounting centres.
- Covers, plates and dollies are made from UV stabilised polycarbonate to avoid discolouring to yellow.
- Standard colour is white. Black also stocked - please check availability.
- Power points approved to AS/NZS3112.
- Active is auto switched.
- Shuttered.
- Typical example of size seen below:

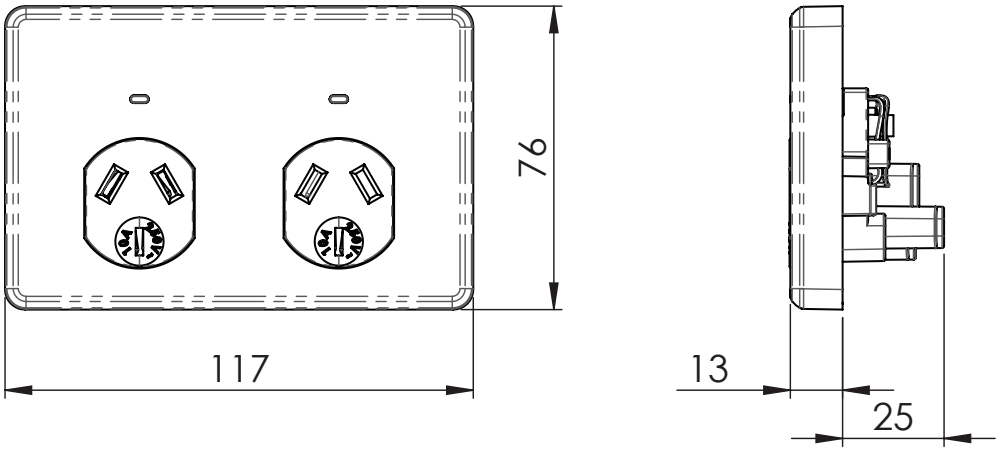

Cleaning Guide:

Spraying cleaning products on to electrical products is not recommended.

It is important to ensure that switches are turned off before cleaning.

Do not use any cleaning sprays - only wipe down with damp cloth or rub with dry cloth. (Do not use an abrasive cloth as it may scratch the plastic).

Do not use harsh chemical cleaners as these can break down the plastic and cause it to crack.

Catalogue Number	Description
PUPP2GAU	Power Point Auto Switched 2 Gang 10A 250V ac White

When ordering BLACK product add "BK" at end of catalogue number, ie PUPP2GBK

Certification Number:
GMA-511521-EA

GSM Electrical (Australia) Pty Ltd
Level 2, 142-144 Fullarton Road, Rose Park SA 5067
P: 1300 301 838 | E: service@gsme.com.au
www.gsme.com.au

100% AUSTRALIAN OWNED & OPERATED

10 Yr Warranty

PUMA™ TRADER®

Vertical Switches

PUSWV1G
PUSWV2G
PUSWV3G
PUSWV4G
PUSWV5G
PUSWV6G

Horizontal Switches

PUSW1G
PUSW2G
PUSW3G
PUSW4G
PUSW5G
PUSW6G

Switch Plates (Less Mechs)

PUSWPV1G
PUSWPV2G
PUSWPV3G
PUSWPV4G
PUSWPV5G
PUSWPV6G
PUSWPVXG

See current catalogue for further detail

Cleaning Guide:

Spraying cleaning products on to electrical products is not recommended.

It is important to ensure that switches are turned off before cleaning.

Do not use any cleaning sprays - only wipe down with damp cloth or rub with dry cloth. (Do not use an abrasive cloth as it may scratch the plastic).

Do not use harsh chemical cleaners as these can break down the plastic and cause it to crack.

Switch Plates

- Switches are rated 10AX/16A 250V~ and approved to AS/NZS3133
- Fits recessed Australian wall boxes and mounting accessories that use 84mm mounting centres
- Uses brass tunnel terminals that have the screws backed out for easier installation of cabling. Switches are two way with looping terminal and suit 4 x 1.5mm2 cabling with 4.1 bore
- Slotted head screws for the terminals
- Covers, plates and dollies are made from UV stabilised polycarbonate to avoid discolouring to yellow
- Standard colour is White. Also available in Matt White, Black, Matt Black & Brushed Aluminium - please check availability
- SBL100W
- Plates suit Trader Meerkat MESW mechs, including TV and Data; and Clipsal 30 Style* mechs and accessories
- Typical example of size seen below:

Example of cover plate only / grid and plate only (less mech)

Example of cover plate with MERJ6CM data mech installed

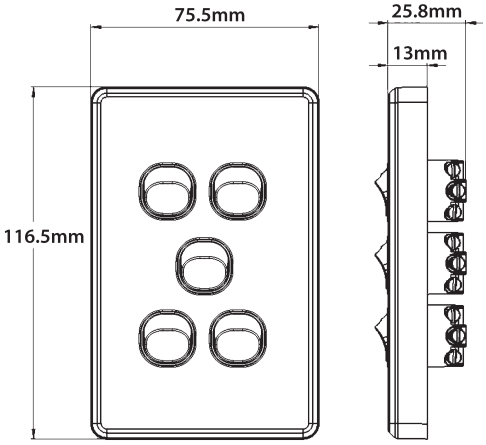

Catalogue No.	Description
PUSW1G	Switch Horizontal 1 Gang 10AX 16A 250V ac White
PUSW2G	Switch Horizontal 2 Gang 10AX 16A 250V ac White
PUSW3G	Switch Horizontal 3 Gang 10AX 16A 250V ac White
PUSW4G	Switch Horizontal 4 Gang 10AX 16A 250V ac White
PUSW5G	Switch Horizontal 5 Gang 10AX 16A 250V ac White
PUSW6G	Switch Horizontal 6 Gang 10AX 16A 250V ac White
PUSWV1G	Switch Vertical 1 Gang 10AX 16A 250V ac White
PUSWV2G	Switch Vertical 2 Gang 10AX 16A 250V ac White
PU WV3G	Switch Vertical 3 Gang 10AX 16A 250V ac White
PUSWV4G	Switch Vertical 4 Gang 10AX 16A 250V ac White
PUSWV5G	Switch Vertical 5 Gang 10AX 16A 250V ac White
PUSWV6G	Switch Vertical 6 Gang 10AX 16A 250V ac White

Catalogue No.	Description
PUSWPV1G	Switch Plate Vertical 1 Gang Less Mech White
PUSWPV2G	Switch Plate Vertical 2 Gang Less Mech White
PUSWPV3G	Switch Plate Vertical 3 Gang Less Mech White
PUSWPV4G	Switch Plate Vertical 4 Gang Less Mech White
PUSWPV5G	Switch Plate Vertical 5 Gang Less Mech White
PUSWPV6G	Switch Plate Vertical 6 Gang Less Mech White
PUSWPVXG	Blank Plate and Cover White

The above catalogue numbers where "P" appears in number, refers to Cover Plate Only / Grid and Plate only (less mech)

*When ordering **BLACK** product add "**BK**" at end of catalogue number, ie PUSWV1GBK*
When ordering BRUSHED ALUMINIUM (cover) add "CBA" at end of catalogue number, ie PUSWV1GCBA
When ordering REPLACEMENT "COVERS ONLY" add "CO" at end of catalogue number, ie PUSWPV1GCO

* The Clipsal brand and associated products are Trademarks of Schneider Electric (Australia) Pty Ltd.
GSM Electrical (Australia) Pty Ltd, the TRADER brand and it's products, have no endorsement or affiliation with Schneider Electric Pty Ltd.

Certification Number:
GMA-508434-EA

GSM Electrical (Australia) Pty Ltd
Level 2, 142-144 Fullarton Road, Rose Park SA 5067
P: 1300 301 838 | E: service@gsme.com.au
www.gsme.com.au

100% AUSTRALIAN OWNED & OPERATED

10 Yr Warranty

PUMA™

TRADER®

PUPP1GCBA
PUPP2GCBA
PUPPSW1GCBA
PUPPSW2GCBA
PUSWDPOV45CBA
PUSWPV1GCBA
PUSWPV2GCBA
PUSWPV3GCBA
PUSWPV4GCBA
PUSWPV5GCBA
PUSWPV6GCBA

See current catalogue for further detail

Brushed Aluminium Covers

- Brushed Aluminium covers provide a great protective upgrade to switches and power points and do not fingerprint as much as other materials while providing a similar look.
- The brushed finish is complemented with the décor of other brushed stainless appliances or looks stylish on other backgrounds.

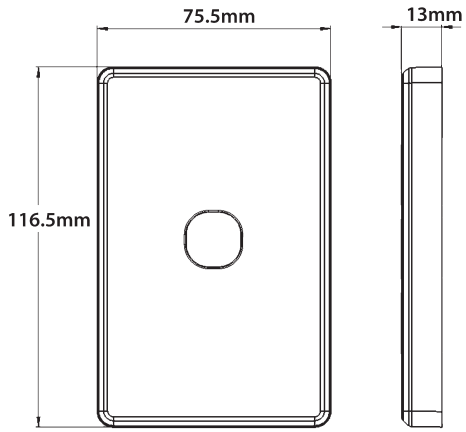

Example of cover plate PUPPSW1GCBA

Example of cover plate with PUPPSW1GCBA with PUPPSW1G

Example of cover plate with PUPPSW1GCBA with PUPPSW1G

Catalogue Number	Description
PUPP1GCBA	Power Point Switched 1 Gang Cover Only Brushed Aluminium
PUPP2GCBA	Power Point Switched 2 Gang Cover Only Brushed Aluminium
PUPPSW1GCBA	Power Point Switched 1 Gang with Extra Switch Cover Only Brushed Aluminium
PUPPSW2GCBA	Power Point Switched 2 Gang with Extra Switch Cover Only Brushed Aluminium
PUSWDPOV45CBA	Switch Oven Double Pole Cover Only Brushed Aluminium
PUSWPV1GCBA	Switch Plate Vertical 1 Gang Cover Only Brushed Aluminium
PUSWPV2GCBA	Switch Plate Vertical 2 Gang Cover Only Brushed Aluminium
PUSWPV3GCBA	Switch Plate Vertical 3 Gang Cover Only Brushed Aluminium
PUSWPV4GCBA	Switch Plate Vertical 4 Gang Cover Only Brushed Aluminium
PUSWPV5GCBA	Switch Plate Vertical 5 Gang Cover Only Brushed Aluminium
PUSWPV6GCBA	Switch Plate Vertical 6 Gang Cover Only Brushed Aluminium

Cleaning Guide:

Spraying cleaning products on to electrical products is not recommended.

It is important to ensure that switches are turned off before cleaning.

Do not use any cleaning sprays - only wipe down with damp cloth or rub with dry cloth. (Do not use an abrasive cloth as it may scratch the plastic).

Do not use harsh chemical cleaners as these can break down the plastic and cause it to crack.

GSM Electrical (Australia) Pty Ltd
Level 2, 142-144 Fullarton Road, Rose Park SA 5067
P: 1300 301 838 | E: service@gsme.com.au
www.gsme.com.au

100% AUSTRALIAN OWNED & OPERATED

10 Yr Warranty

PUMA™ TRADER®

PUSWV3GLFH

See current catalogue for further detail

Puma FAN, LIGHT, HEAT Switch Plate

The Puma PUSWV3GLFH is the stylish 3 Gang Switch Plate that has mechanisms labelled with LIGHT, FAN, HEAT, text.

It is the ideal product to control LIGHT/FAN/HEAT 3IN1 bathroom units (2 lamp version).

Features:

- Switches are rated 10AX/16A 250V~ and approved to AS/NZS3133.
- Fits standard Australian wall boxes and mounting accessories that use 84mm mounting centres.
- Uses brass tunnel terminals that have the screws backed out for easier installation of cabling. Switches are two way with looping terminal and suit 4 x 1.5mm^2 cabling with 4.1 bore.
- Slotted head screws for the terminals.
- Covers, plates and dollies are made from UV stabilised polycarbonate to avoid discolouring to yellow.
- Mechs labelled as LIGHT, FAN, HEAT, to be used in conjunction with 3IN1 fan/light/heater
- Standard colour is White.
- Typical example of size seen below:

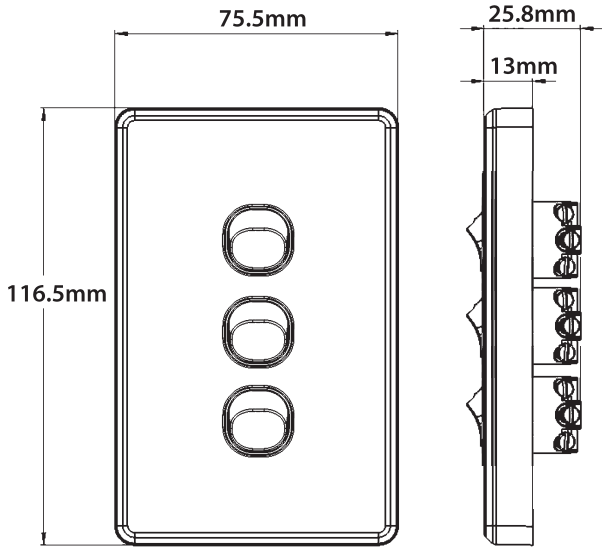

Cleaning Guide:

Spraying cleaning products on to electrical products is not recommended.

It is important to ensure that switches are turned off before cleaning.

Do not use any cleaning sprays - only wipe down with damp cloth or rub with dry cloth. (Do not use an abrasive cloth as it may scratch the plastic).

Do not use harsh chemical cleaners as these can break down the plastic and cause it to crack.

Catalogue Number	Description
PUSWV3GLFH	Switch Vertical 3 Gang 10AX 16A 250V ac Mechs Labelled LIGHT FAN HEAT White

Certification Number:
GMA-508434-EA

GSM Electrical (Australia) Pty Ltd
Level 2, 142-144 Fullarton Road, Rose Park SA 5067
P: 1300 301 838 | E: service@gsme.com.au
www.gsme.com.au

100% AUSTRALIAN OWNED & OPERATED TRADER

10 Yr Warranty TRADER

PUMA™ TRADER®

PUSWV4GFLHH

See current catalogue for further detail

FAN, LIGHT, HEAT Switch Plate

The Puma PUSWV4GFLHH is the stylish 4 Gang Switch Plate that has mechanisms labelled with FAN, LIGHT, HEAT, HEAT text.

It is the ideal product to control FAN/LIGHT/HEAT 3IN1 bathroom units.

Features:

- Switches are rated 10AX/16A 250V~ and approved to AS/NZS3133
- Fits standard Australian wall boxes and mounting accessories that use 84mm mounting centres.
- Uses brass tunnel terminals that have the screws backed out for easier installation of cabling. Switches are two way with looping terminal and suit 4 x 1.5mm2 cabling with 4.1 bore.
- Slotted head screws for the terminals.
- Covers, plates and dollies are made from UV stabilised polycarbonate to avoid discolouring to yellow.
- Mechs labelled as FAN, LIGHT, HEAT, HEAT to be used in conjunction with 3IN1 fan/light/heater
- Standard colour is White.
- Typical example of size seen below:

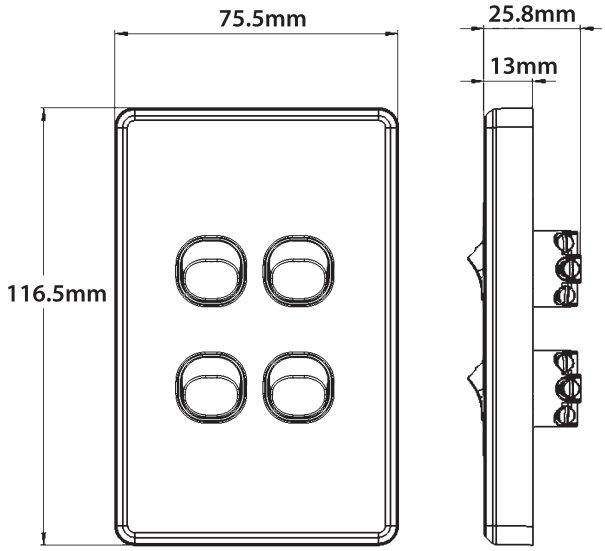

Cleaning Guide:

Spraying cleaning products on to electrical products is not recommended.

It is important to ensure that switches are turned off before cleaning.

Do not use any cleaning sprays - only wipe down with damp cloth or rub with dry cloth. (Do not use an abrasive cloth as it may scratch the plastic).

Do not use harsh chemical cleaners as these can break down the plastic and cause it to crack.

Catalogue Number	Description
PUSWV4GFLHH	Switch Vertical 4 Gang 10AX 16A 250V ac Mechs Labelled FAN LIGHT HEAT HEAT White

Certification Number:
GMA-508434-EA

GSM Electrical (Australia) Pty Ltd
Level 2, 142-144 Fullarton Road, Rose Park SA 5067
P: 1300 301 838 | E: service@gsme.com.au
www.gsme.com.au

100% AUSTRALIAN OWNED & OPERATED TRADER

10 Yr Warranty TRADER

PUMA™ TRADER®

PUSWDPOV45

PUSWDPOV45H

See current catalogue for further detail

FAN, LIGHT, HEAT Switch Plate

- Switch approved to AS/NZS60669.1
- 45A 250V~, Double Pole
- Terminal bore 6.5mm diameter suits 16mm2 cable
- Cover, plate and dolly is made from UV stabilised polycarbonate to avoid discolouring to yellow
- Standard colour is white. Also available in black.

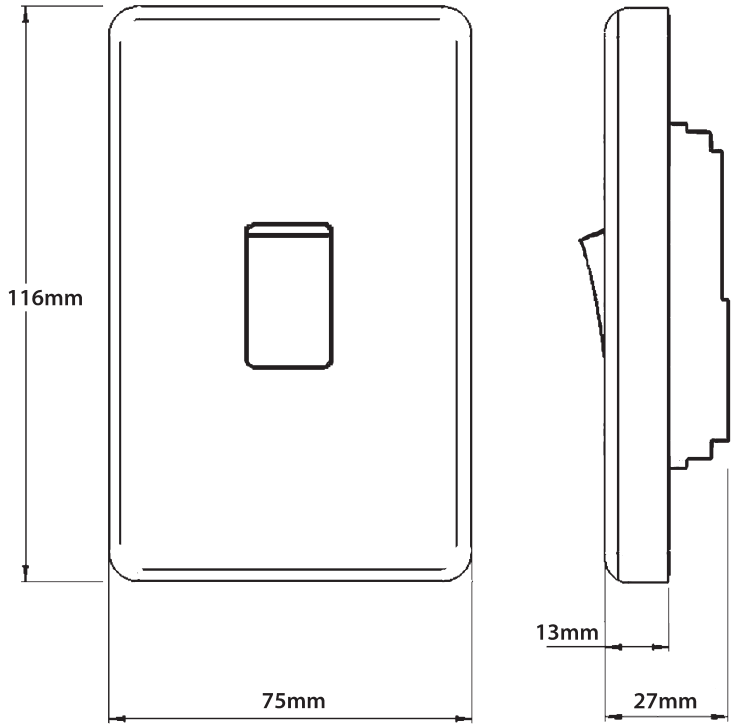

Cleaning Guide:

Spraying cleaning products on to electrical products is not recommended.

It is important to ensure that switches are turned off before cleaning.

Do not use any cleaning sprays - only wipe down with damp cloth or rub with dry cloth. (Do not use an abrasive cloth as it may scratch the plastic).

Do not use harsh chemical cleaners as these can break down the plastic and cause it to crack.

Catalogue Number	Description
PUSWDPOV45	Switch Oven 45A 250V ac Double Pole White
PUSWDPOV45H	Switch Oven 45A 250V ac Double Pole Horizontal White

*When ordering **BLACK** product add "**BK**" at end of catalogue number, ie PUSWDPOV45BK*
When ordering BRUSHED ALUMINIUM (cover) add "CBA" at end of catalogue number, ie PUSWDPOV45CBA

Certification Number:
GMA-514698

GSM Electrical (Australia) Pty Ltd
Level 2, 142-144 Fullarton Road, Rose Park SA 5067
P: 1300 301 838 | E: service@gsme.com.au
www.gsme.com.au

100% AUSTRALIAN OWNED & OPERATED TRADER

10 Yr Warranty TRADER

PUSWV6GKT4
PUSWKT

See current catalogue for further detail

Switch Key Tag

- Hospitality/Occupancy key tag access switch plate.
- Rated 16A/10AX per switch mechanism (4 in plate).
- 2 additional blank apertures for retrofitting additional switches or neon indicators where necessary.
- Ideal for use in hotels, site building access and other areas where the use of facilities needs to be controlled.
- 84mm mounting.
- Developed in the robust Puma Vandal proof series.
- Wall plate Overall height 24mm or 33mm with key inserted.
- Requires 120mm below the wall plate to allow the key to be inserted.
- Standard colour is white. Also available in black.

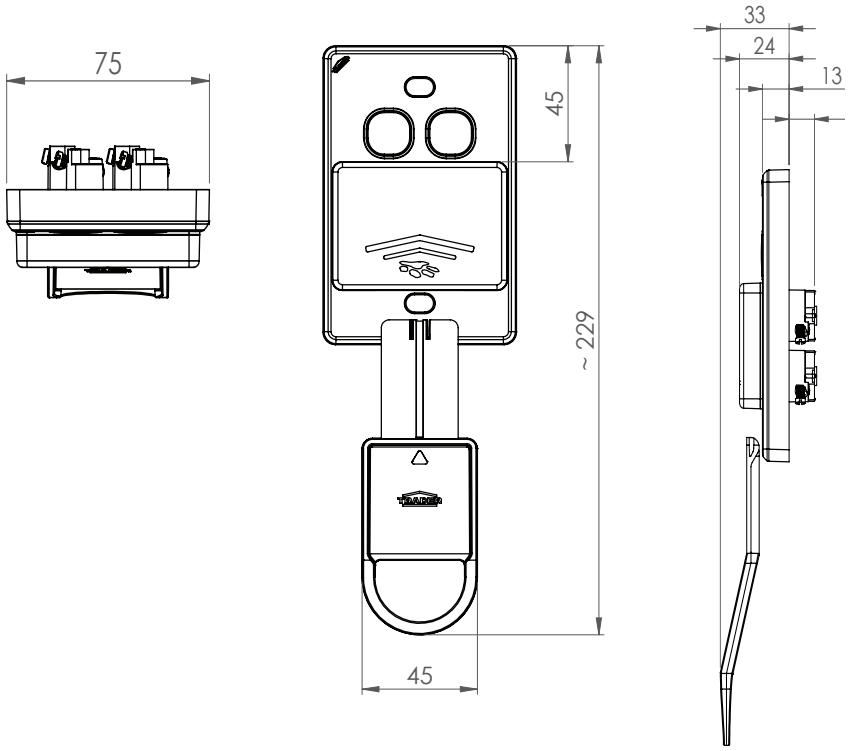

Cleaning Guide:

Spraying cleaning products on to electrical products is not recommended.

It is important to ensure that switches are turned off before cleaning.

Do not use any cleaning sprays - only wipe down with damp cloth or rub with dry cloth. (Do not use an abrasive cloth as it may scratch the plastic).

Do not use harsh chemical cleaners as these can break down the plastic and cause it to crack.

Catalogue Number	Description
PUSWV6GKT4	Switch Key Tag Vertical 6 Gang Grid with 4 10AX 16A 250V ac Switches and 2 Blank Plugs Vandal Proof White
PUSWKT	Switch Key Tag Only to Suit PUSWV6GKT4 White

*When ordering **BLACK** product add "**BK**" at end of catalogue number, ie PUSWV6GKT4BK*

Certification Number:
GMA-508434-EA

GSM Electrical (Australia) Pty Ltd
Level 2, 142-144 Fullarton Road, Rose Park SA 5067
P: 1300 301 838 | E: service@gsme.com.au
www.gsme.com.au

Vertical Switches

PUSWV1G66
PUSWV2G66
PUSWV3G66
PUSWV4G66
PUSWV4G66FLHH

Horizontal Switches

PUSW1G66
PUSW2G66
PUSW3G66
PUSW4G66
PUSW4G66FLHH

See current catalogue for further detail

IP66 Switch Plates

- Trader IP66 rated flush switches have been designed to achieve IP66 on a smooth, flat, non- porous surface, from the front of the switch only.
- The switches are compatible with mounting hardware for standard 84mm mounting centre wallplates.
- IP Rating : IP66 (from front only).
- Voltage Rating: 250V a.c
- Current Rating: 10AX.
- Motor Rating: M100
- No provision has been made to prevent water and dust entering from behind the switch.
- Care should be taken when mounting, to ensure that water and dust cannot bypass the gasket and come in contact with live parts.
- Ensure that the mounting surface is completely flat, smooth and non-porous.
- Make sure the rear gasket seal is located in its correct position. – Use the silicone washer.
- Clip on front cover/surround.
- Standard colour is white. PUSWV4G66 & PUSW4G66 also available in Black & Matt Black - please check availability.

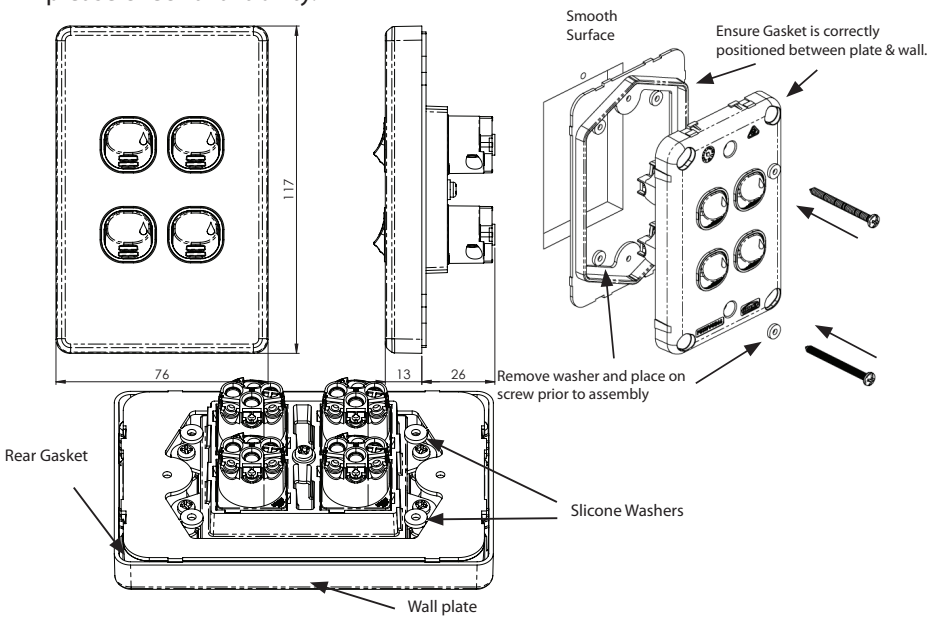

Catalogue Number	Description
PUSW1G66	Switch Horizontal 1 Gang 10AX 250V ac IP66 White
PUSW2G66	Switch Horizontal 2 Gang 10AX 250V ac IP66 White
PUSW3G66	Switch Horizontal 3 Gang 10AX 250V ac IP66 White
PUSW4G66	Switch Horizontal 4 Gang 10AX 250V ac IP66 White
PUSW4G66FLHH	Switch Horizontal 4 Gang 10AX 250V ac IP66 Mechs Labelled FAN LIGHT HEAT HEAT White
PUSWV1G66	Switch Vertical 1 Gang 10AX 250V ac IP66 White
PUSWV2G66	Switch Vertical 2 Gang 10AX 250V ac IP66 White
PUSWV3G66	Switch Vertical 3 Gang 10AX 250V ac IP66 White
PUSWV4G66	Switch Vertical 4 Gang 10AX 250V ac IP66 White
PUSWV4G66FLHH	Switch Vertical 4 Gang 10AX 250V ac IP66 Mechs Labelled FAN LIGHT HEAT HEAT White

When ordering BLACK product add "BK" at end of catalogue number, ie PUSWV4G66BK
When ordering MATT BLACK product add "MBK" at end of catalogue number, ie PUSWV4G66MBK

Cleaning Guide:

Spraying cleaning products on to electrical products is not recommended.

It is important to ensure that switches are turned off before cleaning.

Do not use any cleaning sprays - only wipe down with damp cloth or rub with dry cloth. (Do not use an abrasive cloth as it may scratch the plastic).

Do not use harsh chemical cleaners as these can break down the plastic and cause it to crack.

Certification Number:
GMA-508434-EA

GSM Electrical (Australia) Pty Ltd
Level 2, 142-144 Fullarton Road, Rose Park SA 5067
P: 1300 301 838 | E: service@gsme.com.au
www.gsme.com.au

100% AUSTRALIAN OWNED & OPERATED TRADER

10 Yr Warranty TRADER

PUMA™

TRADER®

PUSWVA1G
PUSWVA2G
PUSWVA3G
PUSWVA4G

See current catalogue for further detail

Architrave Switches

- Switches are rated 10AX/16A 250V~
- Uses brass tunnel terminals that have the screws backed out for easier installation of cabling. Switches are two way with looping terminal and suit 4 x 1.5mm^2 cabling with 4.1mm bore
- Slotted head screws for the terminals
- Covers, plates and dollies are made from UV stabilised polycarbonate to avoid discolouring to yellow
- Standard colour is white.
- Approved to AS/NZS3133
- Typical example of size seen below:

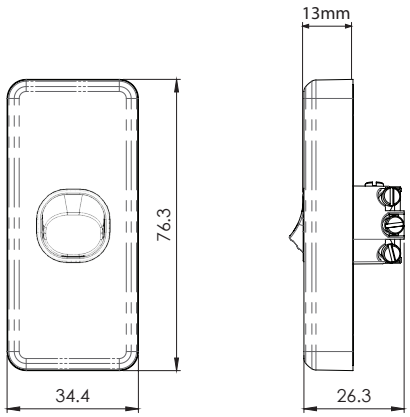

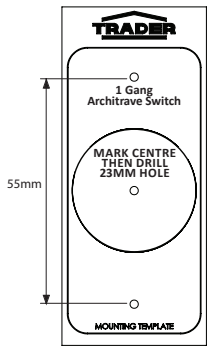

example of cutting template

PUSWVA1G

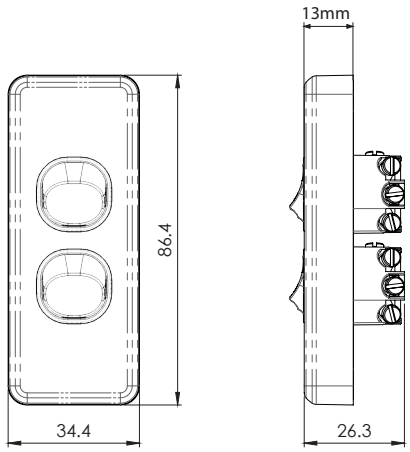

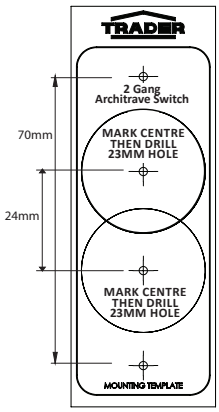

example of cutting template

PUSWVA2G

Catalogue Number	Description
PUSWVA1G	Switch Vertical Architrave 1 Gang 10AX 16A 250V ac White
PUSWVA2G	Switch Vertical Architrave 2 Gang 10AX 16A 250V ac White
PUSWVA3G	Switch Vertical Architrave 3 Gang 10AX 16A 250V ac White
PUSWVA4G	Switch Vertical Architrave 4 Gang 10AX 16A 250V ac White

*When ordering **BLACK** product add "**BK**" at end of catalogue number, ie PUSWVA1GBK*

Cleaning Guide:

Spraying cleaning products on to electrical products is not recommended.

It is important to ensure that switches are turned off before cleaning.

Do not use any cleaning sprays - only wipe down with damp cloth or rub with dry cloth. (Do not use an abrasive cloth as it may scratch the plastic).

Do not use harsh chemical cleaners as these can break down the plastic and cause it to crack.

Certification Number:
GMA-508434-EA
GSM Electrical (Australia) Pty Ltd
Level 2, 142-144 Fullarton Road, Rose Park SA 5067
P: 1300 301 838 | E: service@gsme.com.au
www.gsme.com.au

100% AUSTRALIAN OWNED & OPERATED

10 Yr Warranty

PUSWVA1G
PUSWVA2G
PUSWVA3G
PUSWVA4G

See current catalogue for further detail

Architrave Switches

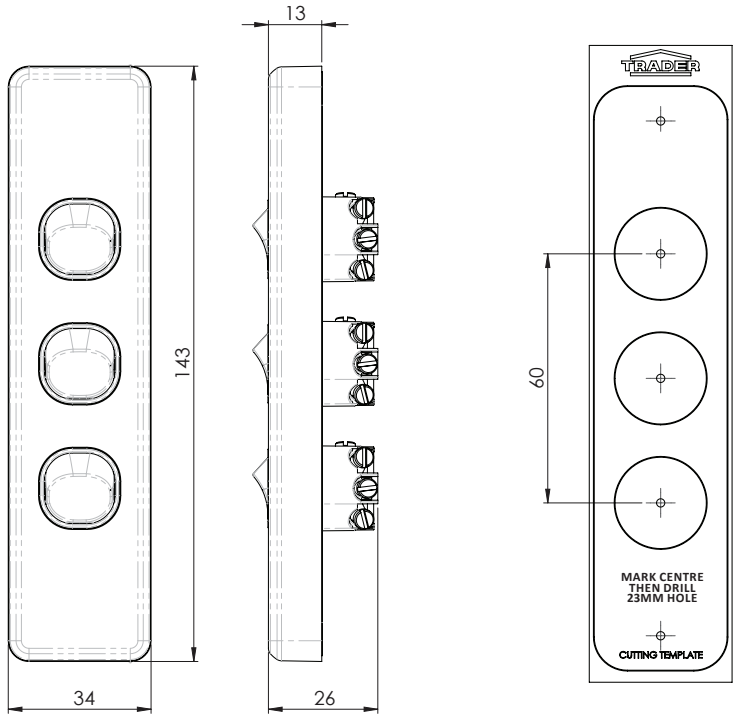

example of cutting template **PUSWVA3G**

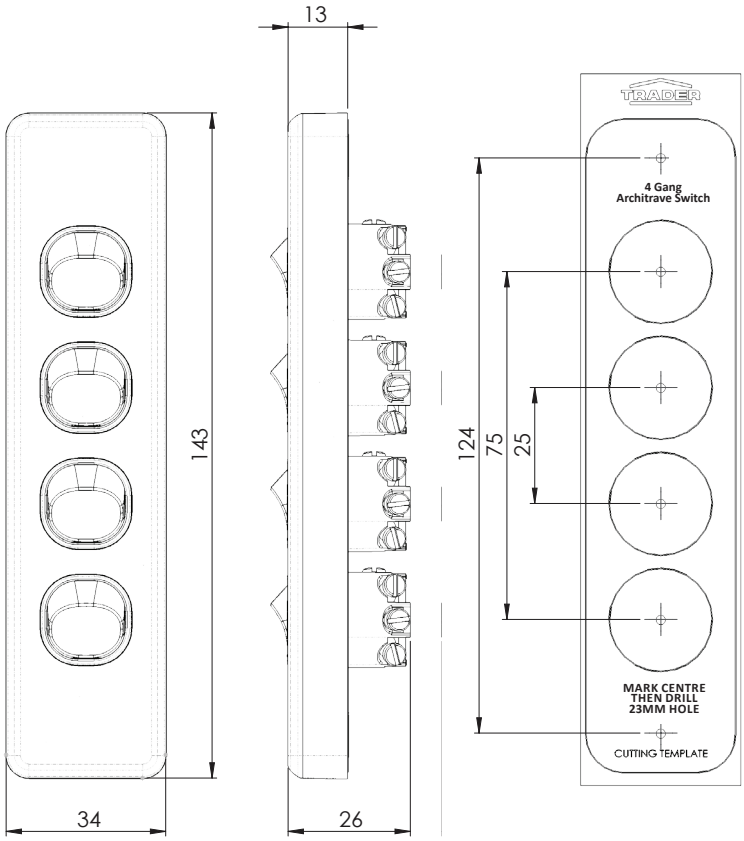

example of cutting template **PUSWVA4G**

Cleaning Guide:

Spraying cleaning products on to electrical products is not recommended.

It is important to ensure that switches are turned off before cleaning.

Do not use any cleaning sprays - only wipe down with damp cloth or rub with dry cloth. (Do not use an abrasive cloth as it may scratch the plastic).

Do not use harsh chemical cleaners as these can break down the plastic and cause it to crack.

Certification Number:
GMA-508434-EA

GSM Electrical (Australia) Pty Ltd
Level 2, 142-144 Fullarton Road, Rose Park SA 5067
P: 1300 301 838 | E: service@gsme.com.au
www.gsme.com.au

PUBIG4
PUBIG5

See current catalogue for further detail

BIG4 and BIG5 Power Points

PUBIG4

- Double pole surface mounted switched Q uad power point.
- 10A at 250V~
- Diameter 6mm terminal bores to suit 4 x 2.5 mm2 cables. 6mm terminal bore.
- Fits 84 mm mounting centres.
- Dolly indicator colour orange.
- Covers, plates and dollies are made from UV stabilised polycarbonate to avoid discolouring to yellow.
- Colour: White / Black / Matt White / Matt Black also stocked - please check availability.
- Approved to AS/NZS3112.

PUBIG5

- Double pole surface mounted switched Five gang power point.
- 10A at 250V~
- Diameter 6mm terminal bores to suit 4 x 2.5 mm2 cables. 6mm terminal bore.
- Fits 84 mm mounting centres.
- Dolly indicator colour orange.
- Covers, plates and dollies are made from UV stabilised polycarbonate to avoid discolouring to yellow.
- Colour: White.
- Mounting blocks include backing plates for situations where fully enclosed insulation is required.
- Colour: White / Black / Matt White / Matt Black also stocked - please check availability.
- Approved to AS/NZS3112.
- The BIG5 uses the same features and mounting system as the BIG4, but has the additional switched power point for convenience.

PUBIG4MB and PUBIG5MB Mounting Blocks

(Separate Data Sheet available with measurements details)

- 25mm high mounting block to suit PUBIG4, LEBIG4, PUBIG5 and LEBIG5
- Made from UV stabilised polycarbonate to avoid discolouring to yellow
- BIG4 Mounting blocks include backing plates for situations where fully enclosed insulation is required.
- BIG5 Mounting blocks include backing plates for situations where fully enclosed insulation is required.

PUBIG4

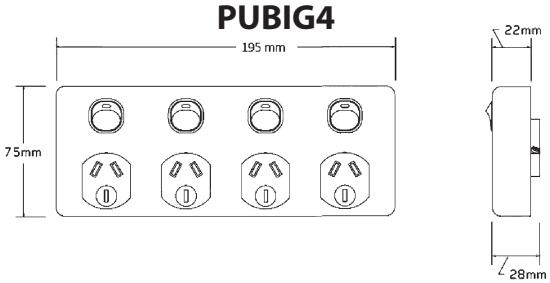

PUBIG5

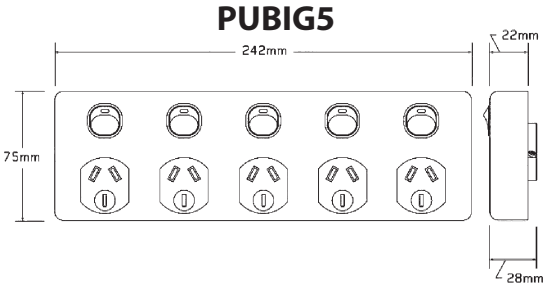

Cleaning Guide:

Spraying cleaning products on to electrical products is not recommended.

It is important to ensure that switches are turned off before cleaning.

Do not use any cleaning sprays - only wipe down with damp cloth or rub with dry cloth. (Do not use an abrasive cloth as it may scratch the plastic).

Do not use harsh chemical cleaners as these can break down the plastic and cause it to crack.

Catalogue Number	Description
PUBIG4	Power Point Switched 4 Gang Double Pole 10A 250V ac Fits Standard 84mm Mounting Centres White
PUBIG5	Power Point Switched 5 Gang Double Pole 10A 250V ac Fits Standard 84mm Mounting Centres White

When ordering BLACK product add "BK" at end of catalogue number, ie PUBIG5BK
When ordering MATT WHITE add "MW" at end of catalogue number, ie PUBIG5MW
When ordering MATT BLACK add "MBK" at end of catalogue number, ie PUBIG5MBK

Certification Number:
GMA-507804-EA

GSM Electrical (Australia) Pty Ltd
Level 2, 142-144 Fullarton Road, Rose Park SA 5067
P: 1300 301 838 | E: service@gsme.com.au
www.gsme.com.au

100% AUSTRALIAN OWNED & OPERATED TRADER

10 Yr Warranty TRADER

PUBIG4MB
PUBIG5MB

See current catalogue for further detail

BIG4 and BIG5 Mounting Blocks

- 25mm high mounting block to suit PUBIG4 and PUBIG5.
- Made from UV stabilised polycarbonate to avoid discolouring to yellow.
- BIG4 Mounting block available in White or Black
- BIG5 Mounting block only available in White
- BIG4 and BIG4 Mounting blocks include backing plates for situations where fully enclosed insulation is required.

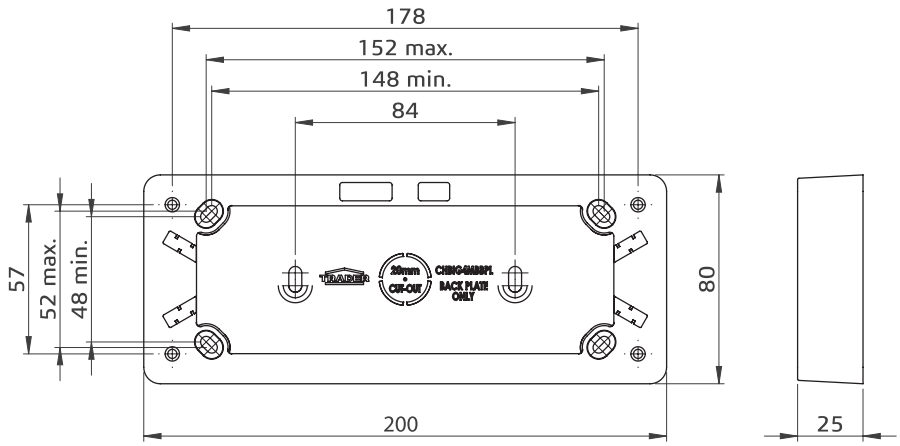

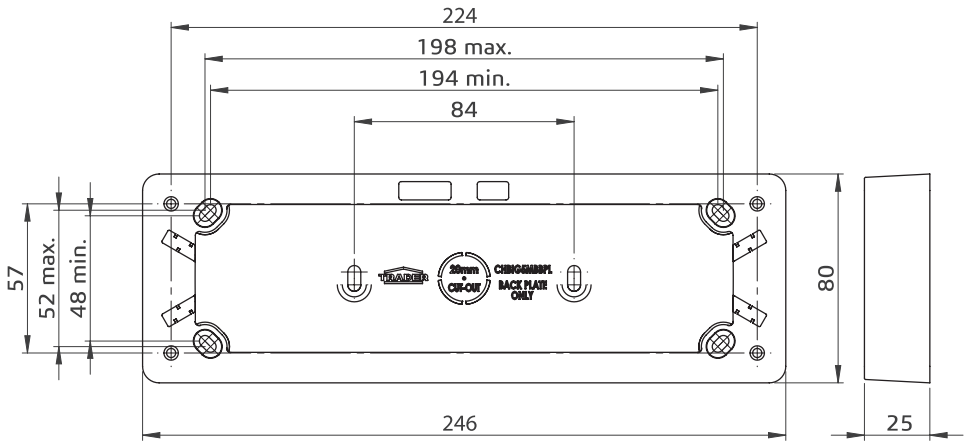

Cleaning Guide:

Spraying cleaning products on to electrical products is not recommended.

It is important to ensure that switches are turned off before cleaning.

Do not use any cleaning sprays - only wipe down with damp cloth or rub with dry cloth. (Do not use an abrasive cloth as it may scratch the plastic).

Do not use harsh chemical cleaners as these can break down the plastic and cause it to crack.

Catalogue Number	Description
PUBIG4MB	Mounting Block 4 Gang for PUBIG4
PUBIG5MB	Mounting Block 5 Gang for PUBIG5

When ordering BLACK product add "BK" at end of catalogue number, ie PUBIG4MBBK

GSM Electrical (Australia) Pty Ltd
Level 2, 142-144 Fullarton Road, Rose Park SA 5067
P: 1300 301 838 | E: service@gsme.com.au
www.gsme.com.au

100% AUSTRALIAN OWNED & OPERATED

10 Yr Warranty

PUMA™ TRADER®

PU4X4
PU4X4AC
PU4X2ACSW

See current catalogue for further detail

4x4/2-4 Power Points x 4/2 USBs

PU4X4

- Approved to AS/NZS3112 & AS/NZS60950-1
- Four power points and four USB ports
- Wide spacing between power points for wide plug bases.
- Mounting Block [PU4X4MB] suits Puma 4X4 Products
- The rating for the USB is 2 x 3.1A at 5V when one device is inserted then it divides to split the output when a device is inserted in each USB socket - 3.1A available across 2 USB outlets on the left and 3.1A available across 2 USB outlets on the right.
- Fits standard wall boxes and mounting accessories
- Covers, plates and dollies are made from UV stabilised polycarbonate to avoid discolouring to yellow
- Standard colour is White. Also available in Black, Matt White and Matt Black - please check availability

DOUBLE POLE

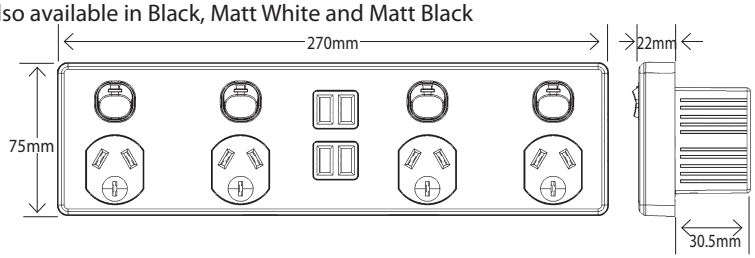

PU4X4AC & PU4X2ACSW

- Approved to AS/NZS3112 & AS/NZS60950-1
- Suitable for USB Type C applications up to 3 Amp at 5V.
- Ideal for phones that utilise USB Type C connections.
- Not suitable for lap tops or other devices requiring greater output than 3 Amp at 5V.
- Four power points and four USB ports
- Wide spacing between power points for wide plug bases.
- PU4X2ACSW comes with a removable switch.
- Mounting Block [PU4X4MB] suits Puma 4X4 Products
- The overall electronic assembly rating is 3.1A at 5V; it then divides the output when devices are inserted in each USB socket.
- Fits standard wall boxes and mounting accessories
- Covers, plates and dollies are made from UV stabilised polycarbonate to avoid discolouring to yellow
- Standard colour is White.

DOUBLE POLE

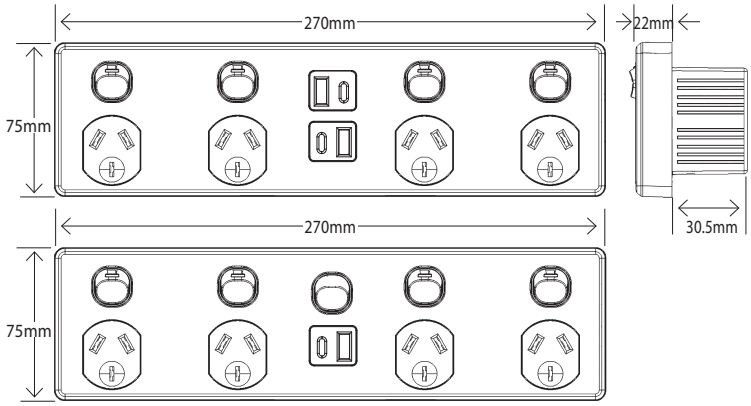

Catalogue Number	Description
PU4X4	Power Point Switched 4 Gang 10A 250V ac Double Pole Quad USB Charger Integrated Type A 3.1A Top 3.1A Bottom White
PU4X4AC	Power Point Switched 4 Gang 10A 250V ac Double Pole Quad USB Charger Integrated Type A and C PD20W LHS or 5V 3A 18W RHS or Dual 15W Top and Bottom White
PU4X2ACSW	Power Point Switched 4 Gang 10A 250V ac Double Pole Dual USB Charger Integrated Type A and C PD20W LHS or 5V 3A 18W RHS or Dual 15W Extra Switch 10AX WhiteType A 3.1A Top 3.1A Bottom White

When ordering BLACK product add "BK" at end of catalogue number, ie PU4X4BK
When ordering MATT WHITE product add "MW" at end of catalogue number, ie PU4X4MW
When ordering MATT BLACK product add "MBK" at end of catalogue number, ie PU4X4MBK

Certification Number:
GMA-502543-EA

Cleaning Guide:

Spraying cleaning products on to electrical products is not recommended.

It is important to ensure that switches are turned off before cleaning.

Do not use any cleaning sprays - only wipe down with damp cloth or rub with dry cloth. (Do not use an abrasive cloth as it may scratch the plastic).

Do not use harsh chemical cleaners as these can break down the plastic and cause it to crack.

GSM Electrical (Australia) Pty Ltd
Level 2, 142-144 Fullarton Road, Rose Park SA 5067
P: 1300 301 838 | E: service@gsme.com.au
www.gsme.com.au

100% AUSTRALIAN OWNED & OPERATED TRADER

2 Yr Warranty TRADER

PUBIG4CA
PUBIG5CA

See current catalogue for further detail

BIG4 and BIG5 Aluminium Look Covers

PUBIG4CA

- Cover are moulded and painted silver to provide the appearance of Aluminium from a distance.
- Covers have been colour matched and finished to complement other PUMA products with Brushed Aluminium covers fitted.
- Suits PUBIG4 (White) and PUBIG4BK

PUBIG5CA

- Cover are moulded and painted silver to provide the appearance of Aluminium from a distance.
- Covers have been colour matched and finished to complement other PUMA products with Brushed Aluminium covers fitted.
- Suits PUBIG5 (White) and PUBIG5BK

PUBIG4MB and PUBIG5MB Mounting Blocks are used in conjunction with PUBIG4 & PUBIG5

(Separate Data Sheet available with measurements details)

- 25mm high mounting block to suit PUBIG4 and PUBIG5
- Made from UV stabilised polycarbonate to avoid discolouring to yellow
- BIG4 Mounting blocks include backing plates for situations where fully enclosed insulation is required.
- BIG5 Mounting blocks include backing plates for situations where fully enclosed insulation is required.

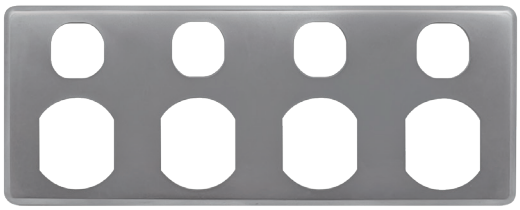

Order code: PUBIG4CA

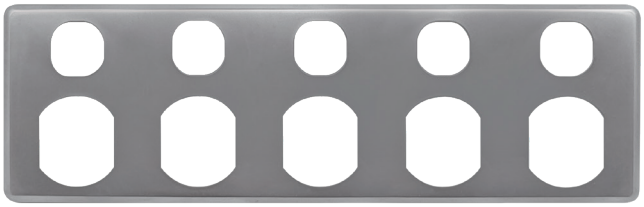

Order code: PUBIG5CA

Cleaning Guide:

Spraying cleaning products on to electrical products is not recommended.

It is important to ensure that switches are turned off before cleaning.

Do not use any cleaning sprays - only wipe down with damp cloth or rub with dry cloth. (Do not use an abrasive cloth as it may scratch the plastic).

Do not use harsh chemical cleaners as these can break down the plastic and cause it to crack.

Catalogue Number	Description
PUBIG4CA	Power Point 4 Gang Cover Only Aluminium
PUBIG5CA	Power Point 5 Gang Cover Only Aluminium

GSM Electrical (Australia) Pty Ltd
Level 2, 142-144 Fullarton Road, Rose Park SA 5067
P: 1300 301 838 | E: service@gsme.com.au
www.gsme.com.au

PU4X4MB

See current catalogue for further detail

4X4 Mounting Blocks

- 31mm high mounting block to suit LE4X4 (34mm with backing plate) .
- Made from UV stabilised polycarbonate to avoid discolouring to yellow.
- Mounting block includes backing plate for situations where fully enclosed insulation is required.
- Standard colour is white. Black also stocked - please check availability.

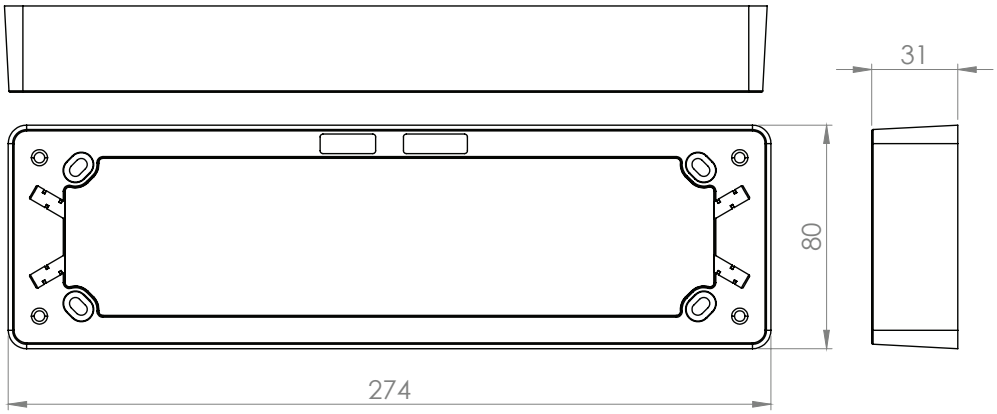

Cleaning Guide:

Spraying cleaning products on to electrical products is not recommended.

It is important to ensure that switches are turned off before cleaning.

Do not use any cleaning sprays - only wipe down with damp cloth or rub with dry cloth. (Do not use an abrasive cloth as it may scratch the plastic).

Do not use harsh chemical cleaners as these can break down the plastic and cause it to crack.

Catalogue Number	Description
PU4X4MB	Mounting Block 4 Gang with Backing Plate for 4X4 USB Range Puma White

GSM Electrical (Australia) Pty Ltd
Level 2, 142-144 Fullarton Road, Rose Park SA 5067
P: 1300 301 838 | E: service@gsme.com.au
www.gsme.com.au

PUUSB2G
PUUSB4G

See current catalogue for further detail

Dual and Quad USB Chargers

PUUSB2G

- USB outlet approved to AS/NZS 60950.1
- The rating for the USB is 3.4A at 5V when one device is inserted then it divides to split the output when a device is inserted in each USB socket
- USB power supply contains temperature cut out and overload protection
- Fits standard wall boxes and mounting accessories
- Full cover plate
- Covers, plates and dollies are made from UV stabilised polycarbonate to avoid discolouring to yellow
- Standard colour is white.

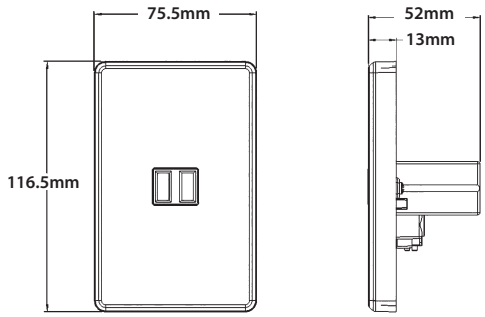

PUUSB4G

- USB outlet approved to AS/NZS 60950.1
- The rating for the USB is 2 x 3.1A at 5V when one device is inserted then it divides to split the output when a device is inserted in each USB socket - 3.1A available across 2 USB outlets on the left and 3.1A available across 2 USB outlets on the right
- USB power supply contains temperature cut out and overload protection
- Fits standard wall boxes and mounting accessories
- Full cover plate
- Covers, plates and dollies are made from UV stabilised polycarbonate to avoid discolouring to yellow
- Standard colour is white.

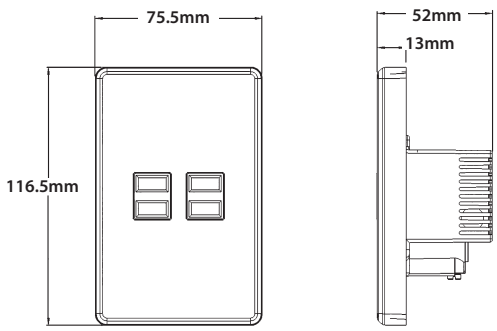

Cleaning Guide:

Spraying cleaning products on to electrical products is not recommended.

It is important to ensure that switches are turned off before cleaning.

Do not use any cleaning sprays - only wipe down with damp cloth or rub with dry cloth. (Do not use an abrasive cloth as it may scratch the plastic).

Do not use harsh chemical cleaners as these can break down the plastic and cause it to crack.

Catalogue Number	Description
PUUSB2G	USB Charger Integrated Plate Dual Type A 5V 1.7A or 3.4A White
PUUSB4G	USB Charger Integrated Plate Quad Type A 5V 1.7A or 3.4A White

GSM Electrical (Australia) Pty Ltd
Level 2, 142-144 Fullarton Road, Rose Park SA 5067
P: 1300 301 838 | E: service@gsme.com.au
www.gsme.com.au

100% AUSTRALIAN OWNED & OPERATED

2 Yr Warranty

PUPP2USB2GAC
PUPP2USB2GCC

See current catalogue for further detail

Dual USB Charger Power Points

PUPP2USB2GAC

- Suitable for USB Type C applications up to 3 Amp at 5V.
- Ideal for phones that utilise USB Type C connections.
- Not suitable for lap tops or other devices requiring greater output than 3 Amp at 5V.
- USB outlet approved to AS/NZS 60950.1
- Electrical power point approved to AS/NZS 3112
- The overall electronic assembly rating is 3.4A at 5V; it then divides the output when devices are inserted in each USB socket.
- Fits standard wall boxes and mounting accessories
- Full cover plate
- Covers, plates and dollies are made from UV stabilised polycarbonate to avoid discolouring to yellow
- Standard colour is white. Black and Brushed Aluminium covers also stocked - please check availability

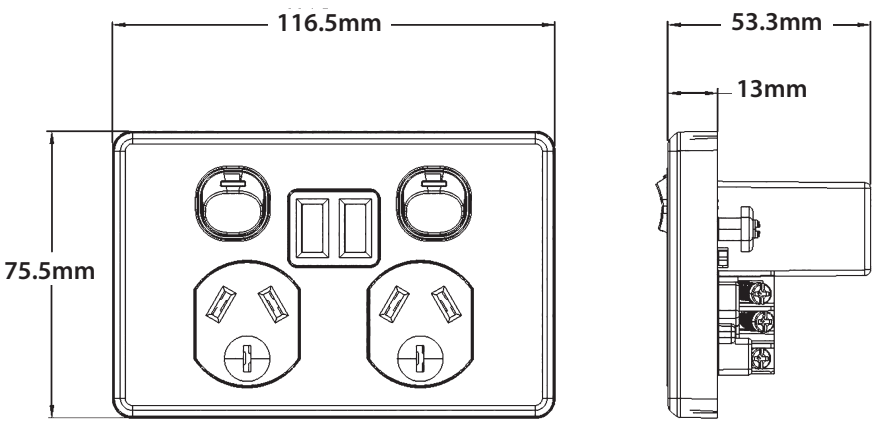

Cleaning Guide:

Spraying cleaning products on to electrical products is not recommended.

It is important to ensure that switches are turned off before cleaning.

Do not use any cleaning sprays - only wipe down with damp cloth or rub with dry cloth. (Do not use an abrasive cloth as it may scratch the plastic).

Do not use harsh chemical cleaners as these can break down the plastic and cause it to crack.

Catalogue Number	Description
PUPP2USB2GAC	Power Point Switched 2 Gang 10A 250V ac Dual USB Charger Integrated Type A and C PD20W LHS or 5V 3A 18W RHS or Dual 15W White
PUPP2USB2GCC	Power Point Switched 2 Gang 10A 250V ac Dual USB Charger Integrated Type C PD20W LHS and 5V 2A 10W RHS or Single PD30W White

When ordering BLACK product add "BK" at end of catalogue number, ie PUPP2USB2GACBK

Certification Number:
GMA-525056-EA

GSM Electrical (Australia) Pty Ltd
Level 2, 142-144 Fullarton Road, Rose Park SA 5067
P: 1300 301 838 | E: service@gsme.com.au
www.gsme.com.au

100% AUSTRALIAN TRADER OWNED & OPERATED

2 Yr Warranty TRADER

PUPP2USB2GAC
PUPP2USB2GCC

See current catalogue for further detail

Dual USB Charger Power Points

PUPP2USB2GCC

- Switch socket rated 10A 250V ac.
- Suitable for USB C applications and performs with the following characteristics:
- USB input 230-240V ~; 50Hz; max 0.5A
- USB-C1 (left output port) C2 (right output port)
- USB-C1 output: DC 5V/3A: DC 9V/3A: DC 12V/2.5A: DC 15V/2A: DC 20V1.5A: PD 30W max.
- USB-C2 output: DC 5V/3A: DC 9V/3A: DC 12V/2.5A: DC 15V/2A: DC 20V1.5A: PD 30W max.
- USB-C1+C2 only output: USB-C1: DC 5V/3A: DC 9 V/2,22 A; DC 12V/1.67A: PD 20W max + DC 5V/2A max.
- Socket tested in accordance with AS/NZS 3112.
- USB tested in accordance with IEC61558-2-16 and AS/NZS 61558.1.
- Not suitable for laptops requiring larger power requirement.
- Fits wall boxes and mounting accessories.
- Full cover plate.
- Covers and dollies are made from UV stabilised polycarbonate to avoid discolouring to yellow.
- Standard colours are white and black.
- This model does not fit the brushed Aluminium cover that are stocked of similar models.

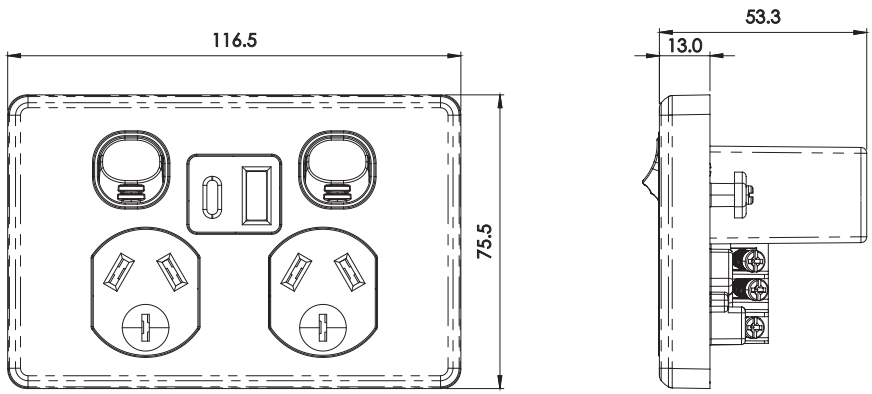

Cleaning Guide:

Spraying cleaning products on to electrical products is not recommended.

It is important to ensure that switches are turned off before cleaning.

Do not use any cleaning sprays - only wipe down with damp cloth or rub with dry cloth. (Do not use an abrasive cloth as it may scratch the plastic).

Do not use harsh chemical cleaners as these can break down the plastic and cause it to crack.

Catalogue Number	Description
PUPP2USB2GAC	Power Point Switched 2 Gang 10A 250V ac Dual USB Charger Integrated Type A and C PD20W LHS or 5V 3A 18W RHS or Dual 15W White
PUPP2USB2GCC	Power Point Switched 2 Gang 10A 250V ac Dual USB Charger Integrated Type C PD20W LHS and 5V 2A 10W RHS or Single PD30W White

When ordering BLACK product add "BK" at end of catalogue number, ie PUPP2USB2GCCBK

Certification Number:
GMA-523264-EA

GSM Electrical (Australia) Pty Ltd
Level 2, 142-144 Fullarton Road, Rose Park SA 5067
P: 1300 301 838 | E: service@gsme.com.au
www.gsme.com.au

100% AUSTRALIAN OWNED & OPERATED

2 Yr Warranty

PUMB

See current catalogue for further detail

Mounting Block

- 84mm mounting centres
- Suitable for use with Puma Range
- Made from UV stabilised polycarbonate to avoid discolouring to yellow
- Overall dimensions (length 117.5mm x width 76mm x depth 14mm)

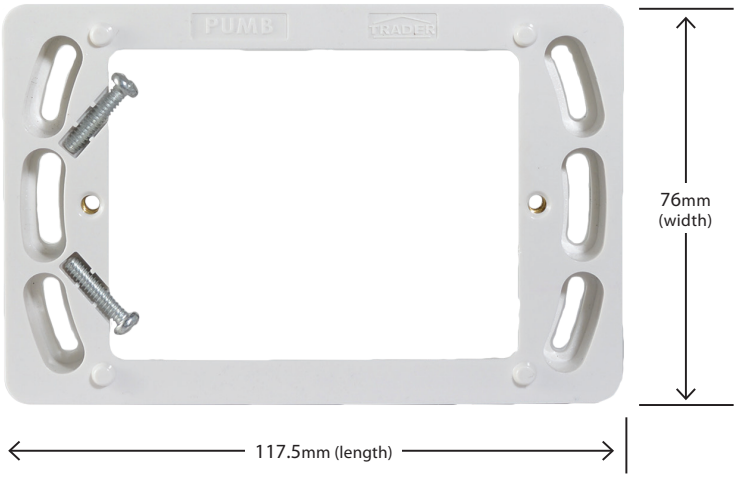

Front view

Side view

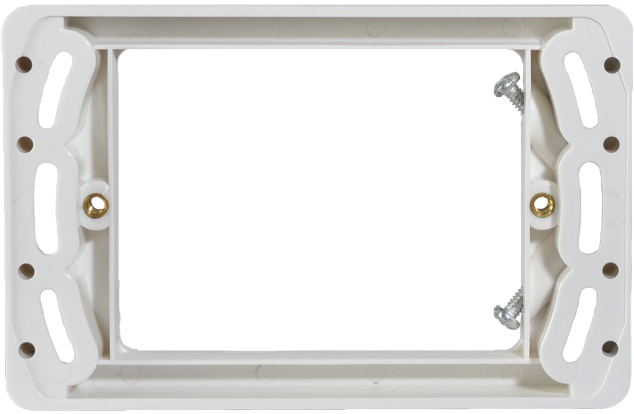

Back view

Cleaning Guide:

Spraying cleaning products on to electrical products is not recommended.

It is important to ensure that switches are turned off before cleaning.

Do not use any cleaning sprays - only wipe down with damp cloth or rub with dry cloth. (Do not use an abrasive cloth as it may scratch the plastic).

Do not use harsh chemical cleaners as these can break down the plastic and cause it to crack.

Catalogue Number	Description
PUMB	Mounting Block 145mm Deep for Range Puma White

GSM Electrical (Australia) Pty Ltd
Level 2, 142-144 Fullarton Road, Rose Park SA 5067
P: 1300 301 838 | E: service@gsme.com.au
www.gsme.com.au

PUPPSHELF
PUPPUSBSHELF

See current catalogue for further detail

Power Point & USB Shelf

- Suitable for use with Puma style plates
- Includes screws and screw caps for secure retention on wall
- No need to remove wall plates from wall for installation of the shelf
- Also suitable for use with Clipsal C2000 Series*

PUPPSHELF

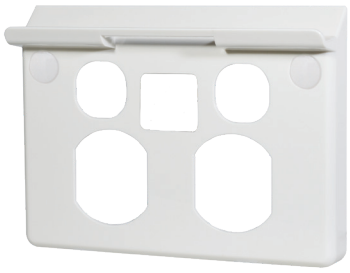

PUPPUSBSHELF

Example of the shelf in use with PUPP2G

Example of the shelf in use with PUPP2USB2G

Example of the PUPPSHELF in use

Example of the PUPPUSBSHELF in use

Includes screws and screw caps

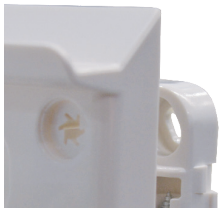

Catalogue Number	Description
PUPPSHELF	Power Point Shelf White
PUPPUSBSHELF	Power Point USB Shelf White

* The Clipsal brand and associated products are Trademarks of Schneider Electric (Australia) Pty Ltd.

GSM Electrical (Australia) Pty Ltd, the TRADER brand and it's products, have no endorsement or affiliation with Schneider Electric Pty Ltd.

Cleaning Guide:

Spraying cleaning products on to electrical products is not recommended.

It is important to ensure that switches are turned off before cleaning.

Do not use any cleaning sprays - only wipe down with damp cloth or rub with dry cloth. (Do not use an abrasive cloth as it may scratch the plastic).

Do not use harsh chemical cleaners as these can break down the plastic and cause it to crack.

GSM Electrical (Australia) Pty Ltd
Level 2, 142-144 Fullarton Road, Rose Park SA 5067
P: 1300 301 838 | E: service@gsme.com.au
www.gsme.com.au

100% AUSTRALIAN OWNED & OPERATED

10 Yr Warranty

PUENTP3G
PUENTP3GTVA

See current catalogue for further detail

Entertainment Plates

- Protrudes from wall 31mm
- Mounting centres standard 84mm
- PUMA style cover finishes the appearance

Product comes in two forms, empty apertures or pre populated:

PUENTP3G (Empty)

For use with any form of Trader or Clipsal* style clip in Audio Visual or Data Jack products

PUENTP3GTVA (Populated)

Comes with Cat6 Data Jack [MERJ6CM], HDMI Cable with 2 Fem Clips 18 cm [MEHDMI] and Foxtel approved F-type connector [METVFFCMFX] with 90° screwed adaptor [METVFFA90FX].

WARNING: This product is not approved for use with 250V~ switches

PUENTP3G - EMPTY

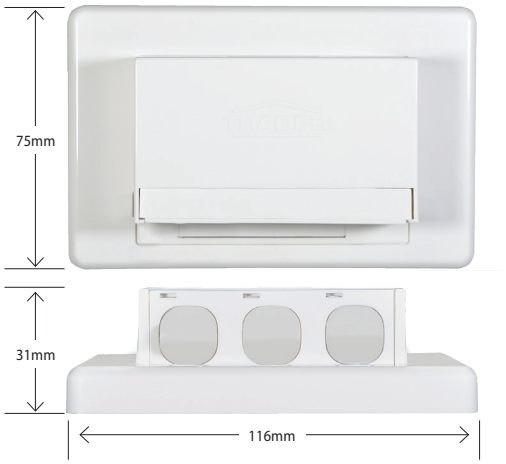

PUENTP3GTVA - POPULATED

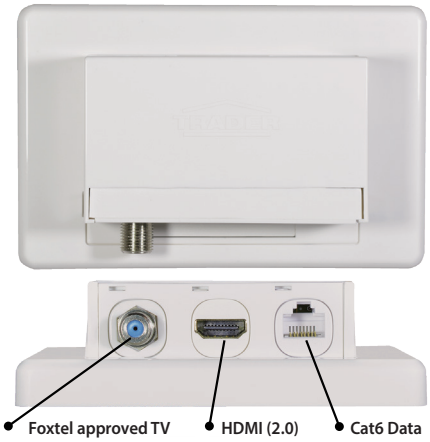

Jack clip in plate comes separate for easy installation and termination

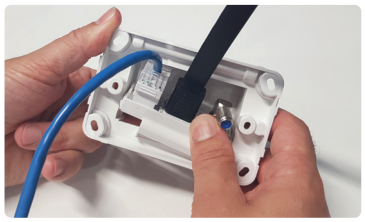

Pre-assembled and terminated plate can be rotated into position and clipped into place.

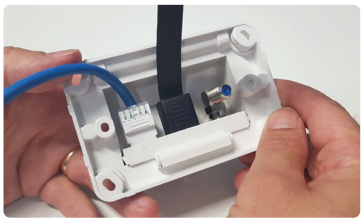

View shows underside where plate has been completely clipped in.

View shows assembly where plate has been completely clipped in ready for installation .

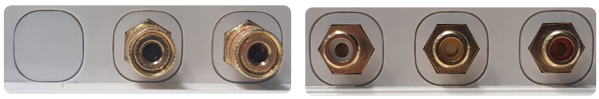

Examples of alternative solutions showing audio visual jacks being fitted to the Puma Entertainment Plate product

Catalogue Number	Description
PUENTP3G	Entertainment Plate Unpopulated White
PUENTP3GTVA	Entertainment Plate with TV Accessories HDMI CAT6 Foxtel Approved F to F Type Mech White

* The Clipsal brand and associated products are Trademarks of Schneider Electric (Australia) Pty Ltd.

GSM Electrical (Australia) Pty Ltd, the TRADER brand and it's products, have no endorsement or affiliation with Schneider Electric Pty Ltd.

Cleaning Guide:

Spraying cleaning products on to electrical products is not recommended.

It is important to ensure that switches are turned off before cleaning.

Do not use any cleaning sprays - only wipe down with damp cloth or rub with dry cloth. (Do not use an abrasive cloth as it may scratch the plastic).

Do not use harsh chemical cleaners as these can break down the plastic and cause it to crack.

GSM Electrical (Australia) Pty Ltd
Level 2, 142-144 Fullarton Road, Rose Park SA 5067
P: 1300 301 838 | E: service@gsme.com.au
www.gsme.com.au

100% AUSTRALIAN OWNED & OPERATED

10 Yr Warranty

PUPP2GSK
PUPP2GSK1015

See current catalogue for further detail

Power Point Skirting Mount

- The Double Power Point assembly consists of two single power points that are looped together (loops are included).
- The slim design is ideal for skirting board applications or thin timber panel mounting where space is an issue.
- The styling of the plate aligns with the rest of the PUMA range.
- The power point is only available in single pole format.
- Slim profile of 54mm high.
- Depth into the wall including the wire loops is 26mm.
- 135mm mounting centres.
- Length overall with cover 160mm.
- Variations available (2x 10A) or (1x 10A & 1x 15A)
- Available in White.

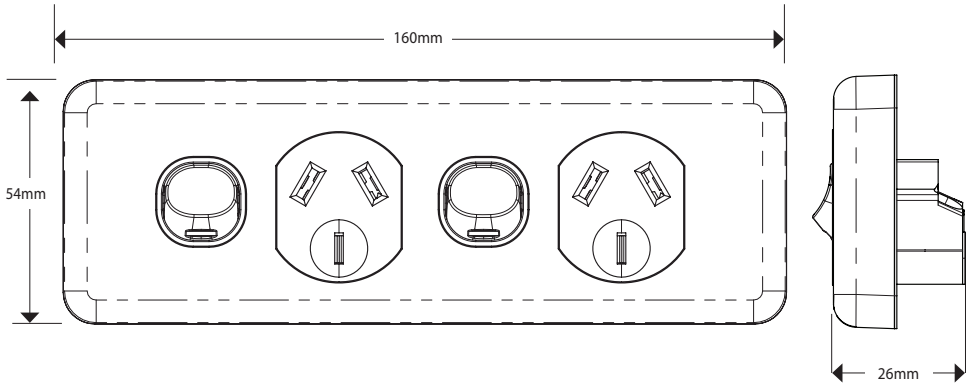

Cleaning Guide:

Spraying cleaning products on to electrical products is not recommended.

It is important to ensure that switches are turned off before cleaning.

Do not use any cleaning sprays - only wipe down with damp cloth or rub with dry cloth. (Do not use an abrasive cloth as it may scratch the plastic).

Do not use harsh chemical cleaners as these can break down the plastic and cause it to crack.

Catalogue Number	Description
PUPP2GSK	Power Point Switched 2 Gang Skirting Mount 10A 250V ac White
PUPP2GSK1015	Power Point Switched 2 Gang Skirting Mount 10A and 15A Sockets 250V ac White

Certification Number:
GMA-509981-EA

GSM Electrical (Australia) Pty Ltd
Level 2, 142-144 Fullarton Road, Rose Park SA 5067
P: 1300 301 838 | E: service@gsme.com.au
www.gsme.com.au

100% AUSTRALIAN OWNED & OPERATED TRADER

10 Yr Warranty TRADER

PUPP4G

See current catalogue for further detail

4 Gang Power Point

- 183mm mounting centers
- Supplied 2 gang wall bracket
- Pre-wired with a 240mm cable loop for easy installation to suit 1 power circuit
- 13mm thick
- Single Pole switched
- 10A 250V
- Covers, plates and dollies are made from UV stabilised polycarbonate to avoid discolouring to yellow.
- Approved to AS/NZS3112.
- Uses brass tunnel terminals that have the screws backed out for easier installation of cabling. Power Point terminals have 5.8mm bore to suit 4 x 2.5mm^2 cable.
- Standard colour is White. Also available in Black - please check availability

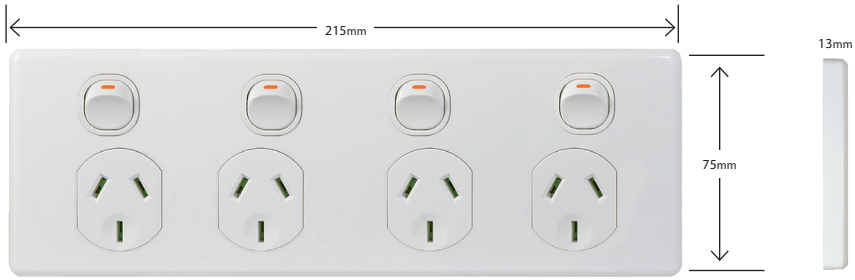

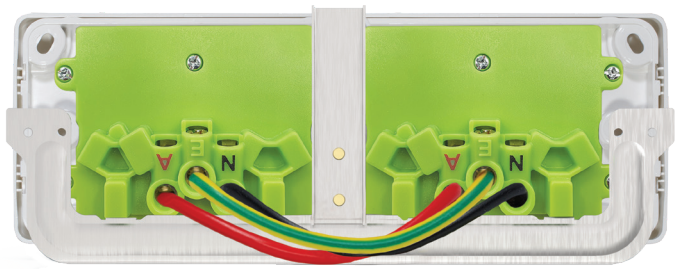

Cleaning Guide:

Spraying cleaning products on to electrical products is not recommended.

It is important to ensure that switches are turned off before cleaning.

Do not use any cleaning sprays - only wipe down with damp cloth or rub with dry cloth. (Do not use an abrasive cloth as it may scratch the plastic).

Do not use harsh chemical cleaners as these can break down the plastic and cause it to crack.

Catalogue Number	Description
PUPP4G	Power Point Switched 4 Gang 10A 250V ac with Custom Mounting Bracket White

Certification Number:
GMA-508660-EA

GSM Electrical (Australia) Pty Ltd
Level 2, 142-144 Fullarton Road, Rose Park SA 5067
P: 1300 301 838 | E: service@gsme.com.au
www.gsme.com.au