# COUSB2G
# COUSB4G

See current catalogue for further detail

# Dual and Quad USB Chargers

## COUSB2G

- USB outlet approved to AS/NZS 60950.1
- The rating for the USB is 3.4A at 5V when one device is inserted then it divides to split the output when a device is inserted in each USB socket.
- USB power supply contains temperature cut out and overload protection.
- Fits standard wall boxes and mounting accessories.
- Covers, plates and dollies are made from UV stabilised polycarbonate to avoid discolouring to yellow.
- Standard colour is white.

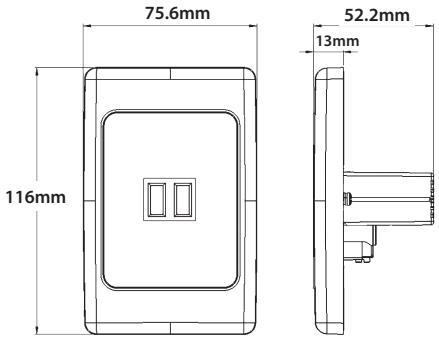


## COUSB4G

- USB outlet approved to AS/NZS 60950.1
- The rating for the USB is 2 x 3.1A at 5V when one device is inserted then it divides to split the output when a device is inserted in each USB socket - 3.1A available across 2 USB outlets on the left and 3.1A available across 2 USB outlets on the right.
- USB power supply contains temperature cut out and overload protection.
- Fits standard wall boxes and mounting accessories.
- Covers, plates and dollies are made from UV stabilised polycarbonate to avoid discolouring to yellow.
- Standard colour is white.

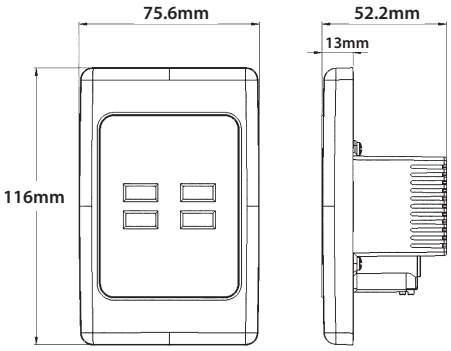


| Catalogue Number | Description |
|---|---|
| COUSB2G | USB Charger Integrated Plate Dual Type A 5V 1.7A or 3.4A White |
| COUSB4G | USB Charger Integrated Plate Quad Type A 5V 1.7A or 3.4A White |

Cleaning Guide:

Spraying cleaning products on to electrical products is not recommended.

It is important to ensure that switches are turned off before cleaning.

Do not use any cleaning sprays - only wipe down with damp cloth or rub with dry cloth. (Do not use an abrasive cloth as it may scratch the plastic).

Do not use harsh chemical cleaners as these can break down the plastic and cause it to crack.

**Certification Number:**
COUSB2G: GMA-508370-EA
COUSB4G: GMA-508370-EA

**GSM Electrical (Australia) Pty Ltd**
5-9 Rundle Street, Kent Town SA 5067
P: 1300 301 838 | E: service@gsme.com.au
www.gsme.com.au