COUGAR™ TRADER®

COSWVA1G
COSWVA2G
COSWVA3G
COSWVA4G

See current catalogue for further detail

Architrave Switch Plates

- Switches are rated 10AX/16A 250V~
- Uses brass tunnel terminals that have the screws backed out for easier installation of cabling. Switches are two way with looping terminal and suit 4 x 1.5mm^2 cabling with 4.1mm bore.
- Slotted head screws for the terminals.
- Covers, plates and dollies are made from UV stabilised polycarbonate to avoid discolouring to yellow.
- Standard colour is white.
- Approved to AS/NZS3133
- SBL100W.
- Typical example of size seen below:

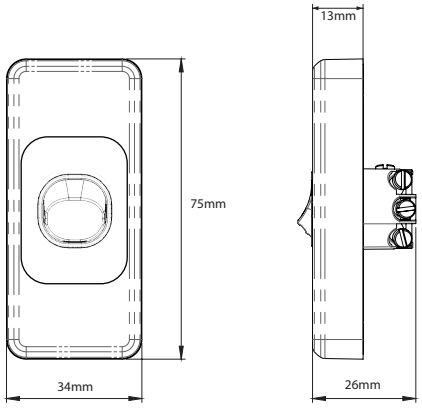

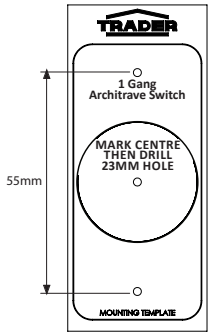

example of cutting template **COSWVA1G**

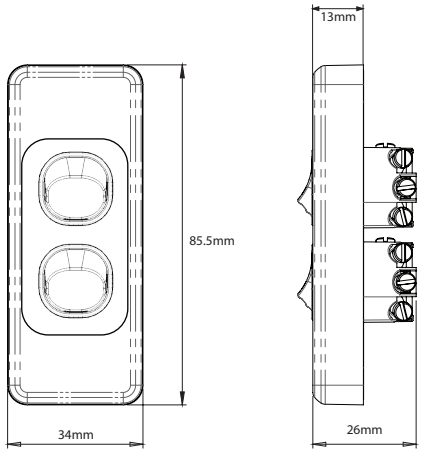

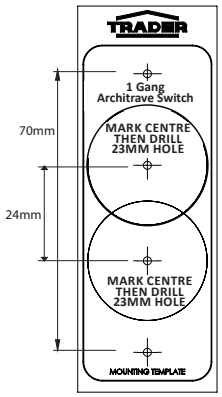

example of cutting template **COSWVA2G**

Catalogue Number	Description
COSWVA1G	Switch Vertical Architrave 1 Gang 10AX 16A 250V ac White
COSWVA2G	Switch Vertical Architrave 2 Gang 10AX 16A 250V ac White
COSWVA3G	Switch Vertical Architrave 3 Gang 10AX 16A 250V ac White
COSWVA4G	Switch Vertical Architrave 4 Gang 10AX 16A 250V ac White

* The Clipsal brand and associated products are Trademarks of Schneider Electric (Australia) Pty Ltd.

GSM Electrical (Australia) Pty Ltd, the TRADER brand and it's products, have no endorsement or affiliation with Schneider Electric Pty Ltd.

Cleaning Guide:

Spraying cleaning products on to electrical products is not recommended.

It is important to ensure that switches are turned off before cleaning.

Do not use any cleaning sprays - only wipe down with damp cloth or rub with dry cloth. (Do not use an abrasive cloth as it may scratch the plastic).

Do not use harsh chemical cleaners as these can break down the plastic and cause it to crack.

Certification Number:
GMA-508434-EA
GSM Electrical (Australia) Pty Ltd
5-9 Rundle Street, Kent Town SA 5067
P: 1300 301 838 | E: service@gsme.com.au
www.gsme.com.au

100% AUSTRALIAN OWNED & OPERATED TRADER

10 Yr Warranty TRADER