Vertical Switches

COSWV1G
COSWV2G
COSWV3G
COSWV4G
COSWV5G
COSWV6G

Horizontal Switches

COSW1G
COSW2G
COSW3G
COSW4G
COSW5G
COSW6G

Switch Plates (Less Mechs)

COSWPV1G
COSWPV2G
COSWPV3G
COSWPV4G
COSWPV5G
COSWPV6G
COSWPVXG

See current catalogue for further detail

Cleaning Guide:

Spraying cleaning products on to electrical products is not recommended.

It is important to ensure that switches are turned off before cleaning.

Do not use any cleaning sprays - only wipe down with damp cloth or rub with dry cloth. (Do not use an abrasive cloth as it may scratch the plastic).

Do not use harsh chemical cleaners as these can break down the plastic and cause it to crack.

Switch Plates

- Switches are rated 10AX/16A 250V~ and approved to AS/NZS3133
- Fits standard Australian wall boxes and mounting accessories that use 84mm mounting centres
- Uses brass tunnel terminals that have the screws backed out for easier installation of cabling - Switches are two way with looping terminal and suit 3 x 1.5mm^2 cabling - 4.1mm terminal bores.
- Combination head screws for the terminals
- Covers, plates and dollies are made from UV stabilised polycarbonate to avoid discolouring to yellow
- The clip in switch mechanism is able to be used and clip into other Trader and competitor switch plate ranges
- Motor rating M100
- SBL100W
- Standard colour is white. Black is also available. Please check availability
- Plates suit Trader Meerkat MESW mechs, including TV and Data; and Clipsal 30 Style* mechs and accessories.
- Typical example of size seen in diagram:

Example of cover plate only / grid and plate only (less mech)

Example of cover plate with MERJ6CM data mech installed

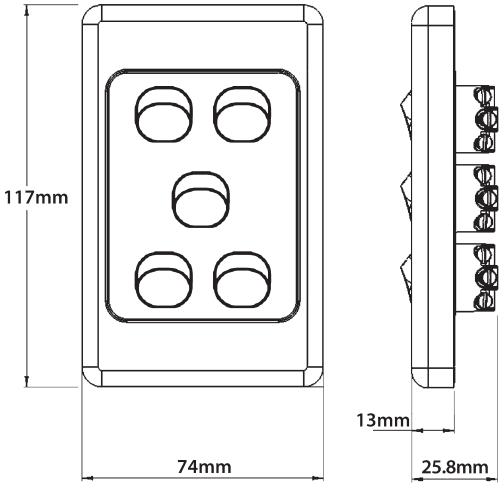

Catalogue No.	Description
COSW1G	Switch Horizontal 1 Gang 10AX 16A 250V ac White
COSW2G	Switch Horizontal 2 Gang 10AX 16A 250V ac White
COSW3G	Switch Horizontal 3 Gang 10AX 16A 250V ac White
COSW4G	Switch Horizontal 4 Gang 10AX 16A 250V ac White
COSW5G	Switch Horizontal 5 Gang 10AX 16A 250V ac White
COSW6G	Switch Horizontal 6 Gang 10AX 16A 250V ac White
COSWV1G	Switch Vertical 1 Gang 10AX 16A 250V ac White
COSWV2G	Switch Vertical 2 Gang 10AX 16A 250V ac White
COSWV3G	Switch Vertical 3 Gang 10AX 16A 250V ac White
COSWV4G	Switch Vertical 4 Gang 10AX 16A 250V ac White
COSWV5G	Switch Vertical 5 Gang 10AX 16A 250V ac White
COSWV6G	Switch Vertical 6 Gang 10AX 16A 250V ac White

Catalogue No.	Description
COSWPV1G	Switch Plate Vertical 1 Gang Less Mech White
COSWPV2G	Switch Plate Vertical 2 Gang Less Mech White
COSWPV3G	Switch Plate Vertical 3 Gang Less Mech White
COSWPV4G	Switch Plate Vertical 4 Gang Less Mech White
COSWPV5G	Switch Plate Vertical 5 Gang Less Mech White
COSWPV6G	Switch Plate Vertical 6 Gang Less Mech White
COSWPVXG	Blank Plate and Cover White

The above catalogue numbers where "P" appears in number, refers to Cover Plate Only / Grid and Plate only (less mech)

*When ordering **BLACK** product add "**BK**" at end of catalogue number, ie COSWV1GBK*

* The Clipsal brand and associated products are Trademarks of Schneider Electric (Australia) Pty Ltd.

GSM Electrical (Australia) Pty Ltd, the TRADER brand and it's products, have no endorsement or affiliation with Schneider Electric Pty Ltd.

Certification Number:
GMA-508434-EA

GSM Electrical (Australia) Pty Ltd
5-9 Rundle Street, Kent Town SA 5067
P: 1300 301 838 | E: service@gsme.com.au
www.gsme.com.au