COSMKXG

See current catalogue for further detail

Surface Mount Kit

- Designed to make mounting easier on hard surfaces where drilling out or depth is a problem.
- The COSMKXG is able to fit all the various models in the Cougar range and allow them to mount up from the surface.
- The deep cover that sits over the product and mounting flange provides and aesthetically pleasing professional finish.
- 84mm mounting centres
- Made from UV stabilised polycarbonate to avoid discolouring to yellow
- Overall dimensions (length 117mm x width 77mm x depth 27mm)
- Provided with two short mounting screws.
- Standard colour is white. Black also stocked - please check availability

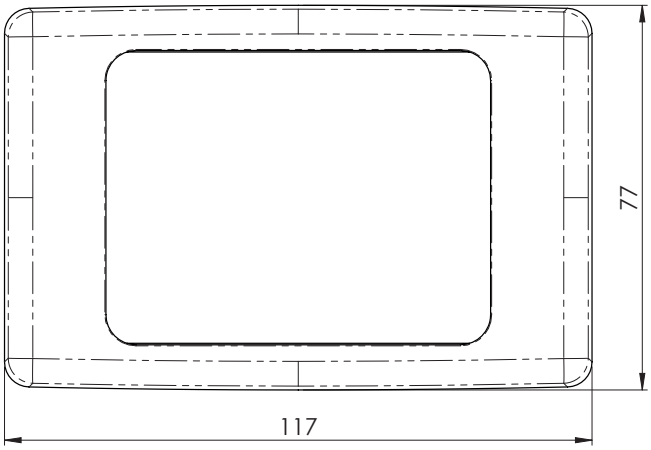

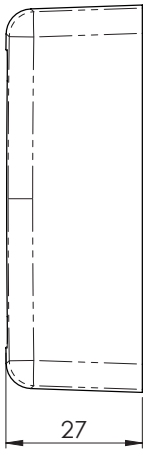

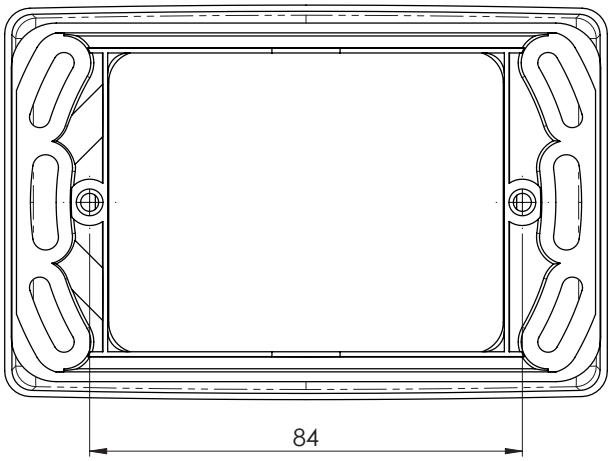

Catalogue Number	Description
COSMKXG	Surface Mounting Kit for Cougar Range White

*When ordering **BLACK** product add "**BK**" at end of catalogue number, ie COSMKXGBK*

* The Clipsal brand and associated products are Trademarks of Schneider Electric (Australia) Pty Ltd.

GSM Electrical (Australia) Pty Ltd, the TRADER brand and it's products, have no endorsement or affiliation with Schneider Electric Pty Ltd.

Cleaning Guide:

Spraying cleaning products on to electrical products is not recommended.

It is important to ensure that switches are turned off before cleaning.

Do not use any cleaning sprays - only wipe down with damp cloth or rub with dry cloth. (Do not use an abrasive cloth as it may scratch the plastic).

Do not use harsh chemical cleaners as these can break down the plastic and cause it to crack.

GSM Electrical (Australia) Pty Ltd
5-9 Rundle Street, Kent Town SA 5067
P: 1300 301 838 | E: service@gsme.com.au
www.gsme.com.au