COUGAR™ TRADER®

COPP2USB2G
COPP2USB2GAC
COPP2USB2GCC

See current catalogue for further detail

Dual USB Charger Power Points

COPP2USB2GCC

- Switch socket rated 10A 250V ac.
- Suitable for USB C applications and performs with the following characteristics:
- USB input 230-240V ~; 50Hz; max 0.5A
- USB-C1 (left output port) C2 (right output port)
- USB-C1 only output: DC 5V/3A: DC 9V/3A: DC 12V/2.5A: DC 15V/2A: DC 20V1.5A: PD 30W max.
- USB-C2 only output: DC 5V/3A: DC 9V/3A: DC 12V/2.5A: DC 15V/2A: DC 20V1.5A: PD 30W max.
- USB-C1+C2 only output: USB-C1: DC 5V/3A: DC 9 V/2,22 A; DC 12V/1.67A: PD 20W max + DC 5V/2A max.
- Socket tested in accordance with AS/NZS 3112.
- USB tested in accordance with IEC61558-2-16 and AS/NZS 61558.1.
- Not suitable for laptops requiring larger power requirement.
- Fits wall boxes and mounting accessories.
- Surround and dollies are made from UV stabilised polycarbonate to avoid discolouring to yellow.
- Standard colours are white and black.

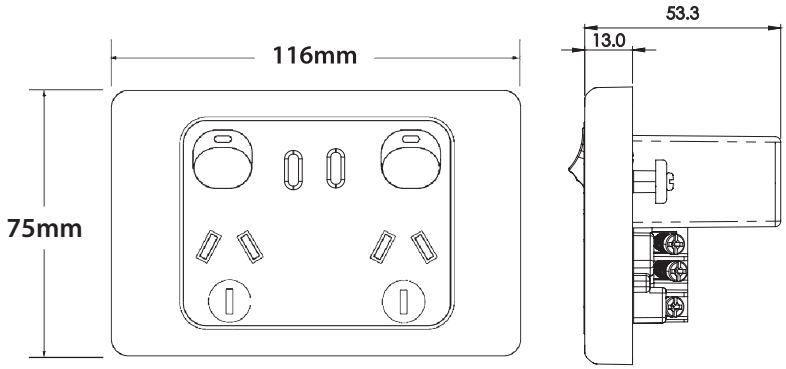

Cleaning Guide:

Spraying cleaning products on to electrical products is not recommended.

It is important to ensure that switches are turned off before cleaning.

Do not use any cleaning sprays - only wipe down with damp cloth or rub with dry cloth. (Do not use an abrasive cloth as it may scratch the plastic).

Do not use harsh chemical cleaners as these can break down the plastic and cause it to crack.

Catalogue Number	Description
COPP2USB2GCC	Power Point Switched 2 Gang 10A 250V ac Dual USB Charger Integrated Type C PD20W LHS and 5V 2A 10W RHS or Single PD30W White

*When ordering **BLACK** product add "**BK**" at end of catalogue number, ie COPP2USB2GCCBK*

Certification Number:
COPP2USB2G: GMA-525056-EA
COPP2USB2GAC & COPP2USB2GCC: GMA-523264-EA

GSM Electrical (Australia) Pty Ltd
5-9 Rundle Street, Kent Town SA 5067
P: 1300 301 838 | E: service@gsme.com.au
www.gsme.com.au

100% AUSTRALIAN OWNED & OPERATED TRADER

2 Yr Warranty TRADER