BUFFALO
CHEMICAL RESISTANT
GREY FOR ALKALINE/CAUSTIC

TRADER®

IP66 Heavy Duty Sockets

BUSO310RG
BUSO315RG
BUSO320FRG
BUSO320RG
BUSO332RG
BUSO410RG
BUSO420RG
BUSO432RG
BUSO440RG
BUSO450RG
BUSO510RG
BUSO520RG
BUSO532RG
BUSO540RG
BUSO550RG

See current catalogue for further detail

The Socket components used in Buffalo Combinations are also available as individual Socket Outlets for use in relevant applications.

They are robust and easy to use, and have a one piece spring-loaded transparent flap with self-latching design to seal out dust and moisture when not in use, ensuring an IP66 rating.

Flap's spring-loaded pin is centrally assembled eliminating the need to insert external cover caps. Flap opens up to 180° enabling easy insertion & removal of plugs.

Threaded socket surround will accept Plug lock rings to ensure IP66 rating & secure fitment.

The range includes three, four, and five pin products in amperages from 10A up to 50A. See the table for product detail.

Small Single phase Flat pin - 10A to 20A
Size 1 Single & Three Phase - 10A- 20A
Size 2 Single & Three Phase - 32A - 50A

Chemical Resistant Grey for Alkaline Applications.

Pin & Volt	Cat No.	Current Rating (A)	Pin Config	Pin Config Code (Table 1)	Enclosure	Minimum Conductor Size (mm²)	Maximum Conductor Size (mm²)	Buffalo Matching Plug
3 Pin 250V~	BUSO310RG	10	3 Flat	A	BUBB1GRO	1.5	6	BUP310RG
	BUSO315RG	15	3 Flat	B	BUBB1GRO	2.5	6	BUP315RG
	BUSO320FRG	20	3 Flat	E	BUBB1GRO	2.5	6	BUP320FRG
	BUSO320RG	20	3 Round	G	BUBB1GRO	2.5	6	BUP320RG / BUPA320RG
	BUSO332RG	32	3 Round	H	BUBB1GRO	6	16	BUP332RG / BUPA332RG
4 Pin 500V~	BUSO410RG	10	4 Round	I	BUBB1GRO	2.5	6	BUP410RG / BUPA410RG
	BUSO420RG	20	4 Round	J	BUBB1GRO	2.5	6	BUP420RG / BUPA420RG
	BUSO432RG	32	4 Round	K	BUBB1GRO	6	16	BUP432RG / BUPA432RG
	BUSO440RG	40	4 Round	L	BUBB1GRO	6	16	BUP440RG / BUPA440RG
	BUSO450RG	50	4 Round	M	BUBB1GRO	6	16	BUP450RG/ BUPA450RG
5 Pin 500V~	BUSO510RG	10	5 Round	N	BUBB1GRO	2.5	6	BUP510RG / BUPA510RG
	BUSO520RG	20	5 Round	O	BUBB1GRO	2.5	6	BUP520RG / BUPA520RG
	BUSO532RG	32	5 Round	P	BUBB1GRO	6	16	BUP532RG / BUPA532RG
	BUSO540RG	40	5 Round	Q	BUBB1GRO	6	16	BUP540RG / BUPA540RG
	BUSO550RG	50	5 Round	R	BUBB1GRO	6	16	BUP550RG / BUPA550RG

When ordering LESS ENCLOSURE add "LE" at end of catalogue number, ie "BUSO310RGLE"

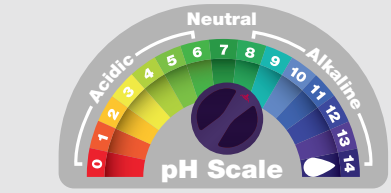

Cleaning Guide:

Spraying cleaning products on to electrical products is not recommended.

It is important to ensure that switches are turned off before cleaning.

Do not use any cleaning sprays - only wipe down with damp cloth or rub with dry cloth. (Do not use an abrasive cloth as it may scratch the plastic).

Do not use harsh chemical cleaners as these can break down the plastic and cause it to crack.

Certification Number:
GMA-513501-EA
GMA-520261
GSM Electrical (Australia) Pty Ltd
5-9 Rundle Street, Kent Town SA 5067
P: 1300 301 838 | E: service@gsme.com.au
www.gsme.com.au

100% AUSTRALIAN OWNED & OPERATED

10 Yr Warranty

BUFFALO
CHEMICAL RESISTANT
GREY FOR ALKALINE/CAUSTIC

TRADER®

IP66 Heavy Duty Sockets

BUSO310RG
BUSO315RG
BUSO320FRG
BUSO320RG
BUSO332RG
BUSO410RG
BUSO420RG
BUSO432RG
BUSO440RG
BUSO450RG
BUSO510RG
BUSO520RG
BUSO532RG
BUSO540RG
BUSO550RG

See current catalogue for further detail

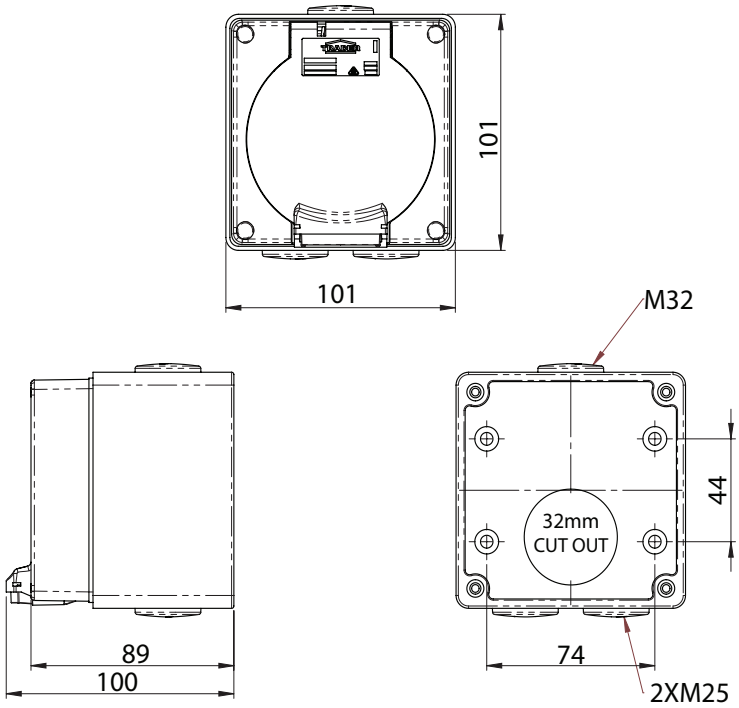

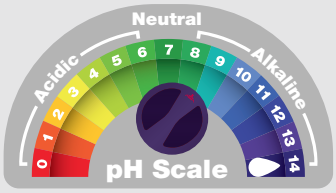

Cleaning Guide:

Spraying cleaning products on to electrical products is not recommended.

It is important to ensure that switches are turned off before cleaning.

Do not use any cleaning sprays - only wipe down with damp cloth or rub with dry cloth. (Do not use an abrasive cloth as it may scratch the plastic).

Do not use harsh chemical cleaners as these can break down the plastic and cause it to crack.

Heavy Duty Socket Terminals

Small Single Phase
Flat pin
10A to 20A

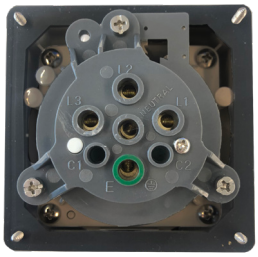

Size 1
Single/Three Phase
10A - 20A

Size 2
Single/Three Phase
32A - 50A

GSM Electrical (Australia) Pty Ltd
5-9 Rundle Street, Kent Town SA 5067
P: 1300 301 838 | E: service@gsme.com.au
www.gsme.com.au

100% AUSTRALIAN OWNED & OPERATED

10 Yr Warranty