BUFFALO
CHEMICAL RESISTANT
GREY FOR ALKALINE/CAUSTIC

TRADER®

IP66 Extension Sockets

BUEXSO310RG
BUEXSO315RG
BUEXSO320FRG
BUEXSO320RG
BUEXSO332RG
BUEXSO410RG
BUEXSO420RG
BUEXSO432RG
BUEXSO440RG
BUEXSO450RG
BUEXSO510RG
BUEXSO520RG
BUEXSO532RG
BUEXSO540RG
BUEXSO550RG

See current catalogue for further detail

- Small Single Phase 10A to 20A (250V~).
- Size 1 Single & Three Phase 10A to 20A (250V~ to 500V~).
- Size 2 Single & Three Phase 32A to 50A (250V~ to 500V~).
- 3 Flat Pin, 3 Round Pin, 4 Round Pin, 5 Round Pin.
- 10A, 15A, 20A, 32A, 40A & 50A current ratings.
- Straight body format providing a more traditional design.
- Ribbed Lock ring on Small Single Phase versions for gripping with gloved hands.
- Rear cord entry and cable gland ensuring IP66 rating.
- Internal cable clamp to support electrical connections.
- Chemical Resistant Grey for Alkaline Applications.
- Size 1 Single and Three Phase suits Smaller to Medium single or three phase loads.
- Size 2 Single and Three Phase suits Medium to Large single or three phase loads.
- Size 1 and Size 2 products have hinged Spring Loaded cover flaps for added safety and to keep dust & water out.
- Small Extension Sockets 10A and 20A accept cables from ø 6-12mm
  Size 1 Extension Sockets 10A and 20A accept cables from ø 12-16mm
  Size 2 Extension Sockets 32A, 40A and 50A accept cables from ø 11-16mm
- NOTE: RG models use purple thread rings and lock glands to represent the pH scale.

Pin & Volt	*Cat No. Extension Sockets	Current Rating (A)	Pin Config	Pin Config Code (Table 1)	Terminal Size	Maximum Conductor Size (mm^2)	Minimum Cable Diameter (mm2)	Maximum Cable Diameter (mm2)	Gland Nut Thread (mm)	Matching Plug Straight / Angled
3 Pin 250V~	BUEXSO310RG	10	3 Flat	A	2.4 x 4.5	6	6	12	M20 x 1.5	BUP310RG
	BUEXSO315RG	15	3 Flat	B	2.4 x 4.5	6	6	12	M20 x 1.5	BUP315RG
	BUEXSO320FRG	20	3 Flat	E	2.4 x 4.5	6	6	12	M20 x 1.5	BUP320FRG
	BUEXSO320RG	20	3 Round	G	ø4.6	6	12	16	M25 x 1.5	BUP320RG / BUPA320RG
	BUEXSO332RG	32	3 Round	H	ø6	16	11	16	M37 x 1.5	BUP332RG / BUPA332RG
4 Pin 500V~	BUEXSO410RG	10	4 Round	I	ø4.6	6	12	16	M25 x 1.5	BUP410RG / BUPA410RG
	BUEXSO420RG	20	4 Round	J	ø4.6	6	12	16	M25 x 1.5	BUP420RG / BUPA420RG
	BUEXSO432RG	32	4 Round	K	ø 6	16	11	16	M37 x 1.5	BUP432RG / BUPA432RG
	BUEXSO440RG	40	4 Round	L	ø 6	16	11	16	M37 x 1.5	BUP440RG / BUPA440RG
	BUEXSO450RG	50	4 Round	M	ø 6	16	11	16	M37 x 1.5	BUP450RG / BUPA450RG
5 Pin 500V~	BUEXSO510RG	10	5 Round	N	ø4.6	6	12	16	M25 x 1.5	BUP510RG / BUPA510RG
	BUEXSO520RG	20	5 Round	O	ø4.6	6	12	16	M25 x 1.5	BUP520RG / BUPA520RG
	BUEXSO532RG	32	5 Round	P	ø 6	16	11	16	M37 x 1.5	BUP532RG / BUPA532RG
	BUEXSO540RG	40	5 Round	Q	ø 6	16	11	16	M37 x 1.5	BUP540RG / BUPA540RG
	BUEXSO550RG	50	5 Round	R	ø 6	16	11	16	M37 x 1.5	BUP550RG / BUPA550RG

All products accept Plug (BUP/BUPA), locking rings which prevents accidental removal and assists with maintaining the highest IP Rating and a spring loaded flap that seals out dust and moisture when not in use.
Compatible with common pendant outlet kits.

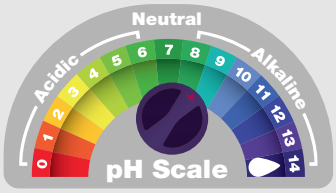

Cleaning Guide:

Spraying cleaning products on to electrical products is not recommended.

It is important to ensure that switches are turned off before cleaning.

Do not use any cleaning sprays - only wipe down with damp cloth or rub with dry cloth. (Do not use an abrasive cloth as it may scratch the plastic).

Do not use harsh chemical cleaners as these can break down the plastic and cause it to crack.

Certification Number:
BUESXO320RG, BUESXO332RG, BUESXO410RG, BUESXO420RG, BUESXO432RG BUESXO440RG, BUESXO450RG, BUESXO510RG, BUESXO520RG, BUESXO532RG, BUESXO540RG, BUESXO550RG: GMA-527928
BUEXSO310RG, BUESXO315RG, BUESXO320FRG: GMA-527862-EA

GSM Electrical (Australia) Pty Ltd
5-9 Rundle Street, Kent Town SA 5067
P: 1300 301 838 | E: service@gsme.com.au
www.gsme.com.au

100% AUSTRALIAN OWNED & OPERATED TRADER

10 Yr Warranty TRADER

BUFFALO
CHEMICAL RESISTANT
GREY FOR ALKALINE/CAUSTIC

TRADER®

IP66 Extension Sockets

BUEXSO310RG
BUEXSO315RG
BUEXSO320FRG
BUEXSO320RG
BUEXSO332RG
BUEXSO410RG
BUEXSO420RG
BUEXSO432RG
BUEXSO440RG
BUEXSO450RG
BUEXSO510RG
BUEXSO520RG
BUEXSO532RG
BUEXSO540RG
BUEXSO550RG

See current catalogue for further detail

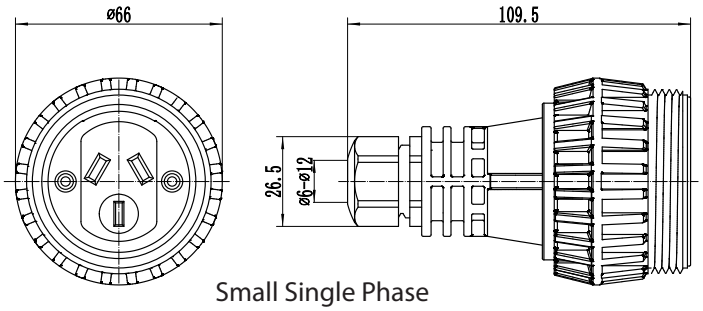

Small Single Phase

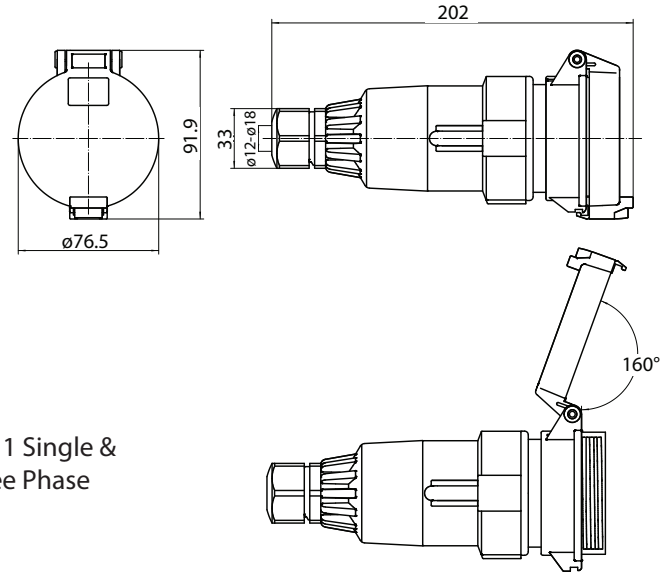

Size 1 Single & Three Phase

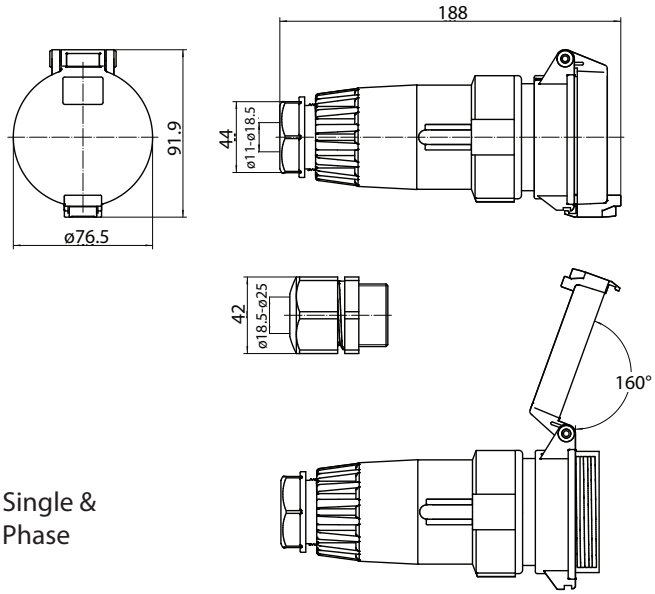

Size 2 Single & Three Phase

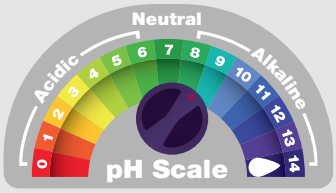

Cleaning Guide:

Spraying cleaning products on to electrical products is not recommended.

It is important to ensure that switches are turned off before cleaning.

Do not use any cleaning sprays - only wipe down with damp cloth or rub with dry cloth. (Do not use an abrasive cloth as it may scratch the plastic).

Do not use harsh chemical cleaners as these can break down the plastic and cause it to crack.

GSM Electrical (Australia) Pty Ltd
5-9 Rundle Street, Kent Town SA 5067
P: 1300 301 838 | E: service@gsme.com.au
www.gsme.com.au

100% AUSTRALIAN OWNED & OPERATED

10 Yr Warranty