BUFFALO
CHEMICAL RESISTANT
WHITE FOR ACIDIC

TRADER®

BUC310RW
BUC315RW
BUC320FRW
BUC320RW
BUC332RW
BUC410RW
BUC420RW
BUC432RW
BUC440RW
BUC450RW
BUC510RW
BUC520RW
BUC532RW
BUC540RW
BUC550RW

See current catalogue for further detail

IP66 Combination Switched Sockets

Buffalo offers an extensive range of IP66 rated Combination Switched Sockets that are available in three-pin 10A to 32A, four-pin 10A to 50A and five-pin 10A to 50A designs.

Phase links are factory fitted between switches and sockets.

Small Single phase Flat pin - 10A to 20A
Size 1 Single & Three Phase - 10A- 20A
Size 2 Single & Three Phase - 32A - 50A

Heavy Duty terminals are standard on all products with Double Pole switching option as standard on 3 pin products.

The combination switch handle has two padlocking facilities (Oval Shape 11 x 9mm) so equipment can be safely isolated.

Switch is provided with LED fitment option (not supplied).

Combination sockets feature a clear dustproof & hoseproof flap allowing simple viewing of sockets. The flap is also provided with a reliable spring-tensioned latch to keep dust & liquids out.

- Recommended screw torque for corner cover screws 0.6Nm
- Recommended torque for Earth/Neutral fixed terminals 2Nm
- Recommended torque for Switch terminals 2.5Nm

Part bag contains twin screwed connector.

Chemical Resistant White for Acid Applications.

- NOTE: RW models use dark red knobs to represent the pH scale.

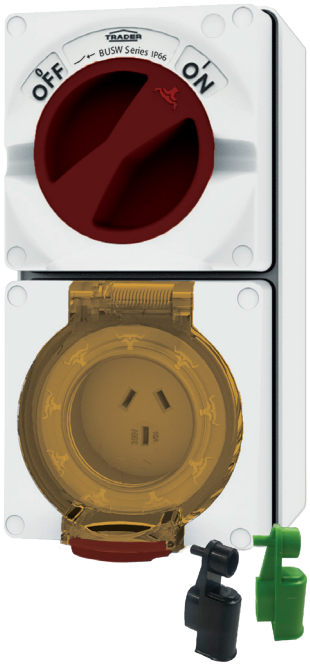

Pin & Volt	Cat No.	Current Rating (A)	Pin Config	Pin Config Code (Table 1)	AC21 Rating (A)	AC23 Rating (A)	M Rating	Minimum Conductor Size (mm²)	Maximum Conductor Size (mm²)	Dimensions H* x W x D (mm)
3 Pin 250V~	BUC310RW	10	3 Flat	A	10	10	200	1.5	6	198x101x84
	BUC315RW	15	3 Flat	B	15	15	200	1.5	6	198x101x84
	BUC320FRW	20	3 Flat	E	20	20	200	2.5	16	198x101x84
	BUC320RW	20	3 Round	G	20	20	200	2.5	16	198x101x108
	BUC332RW	32	3 Round	H	32	32	200	6	16	198x101x108
4 Pin 500V~	BUC410RW	10	4 Round	I	10	10	200	6	16	198x101x108
	BUC420RW	20	4 Round	J	20	20	200	6	16	198x101x108
	BUC432RW	32	4 Round	K	32	32	200	6	16	198x101x108
	BUC440RW	40	4 Round	L	40	40	200	6	16	198x101x108
	BUC450RW	50	4 Round	M	50	50	200	6	16	198x101x108
5 Pin 500V~	BUC510RW	10	5 Round	N	10	10	200	2.5	6	198x101x108
	BUC520RW	20	5 Round	O	20	20	200	2.5	6	198x101x108
	BUC532RW	32	5 Round	P	32	32	200	6	16	198x101x108
	BUC540RW	40	5 Round	Q	40	40	200	6	16	198x101x108
	BUC550RW	50	5 Round	R	50	50	200	6	16	198x101x108

When ordering LESS ENCLOSURE add "LE" at end of catalogue number, ie "BUC310RWLE"

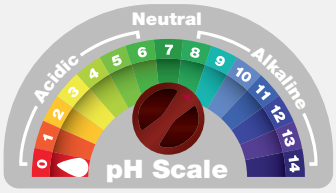

Cleaning Guide:

Spraying cleaning products on to electrical products is not recommended.

It is important to ensure that switches are turned off before cleaning.

Do not use any cleaning sprays - only wipe down with damp cloth or rub with dry cloth. (Do not use an abrasive cloth as it may scratch the plastic).

Do not use harsh chemical cleaners as these can break down the plastic and cause it to crack.

Certification Number:
BUC410RW, BUC420RW, BUC432RW, BUC440RW, BUC450RW, BUC510RW, BUC520RW, BUC532RW, BUC540RW, BUC550RW : GMA-520261
BUC310RW, BUC315RW, BUC320FRW: GMA-513502
BUC320RW, BUC332RW: GMA-520239

GSM Electrical (Australia) Pty Ltd
5-9 Rundle Street, Kent Town SA 5067
P: 1300 301 838 | E: service@gsme.com.au
www.gsme.com.au

100% AUSTRALIAN OWNED & OPERATED

10 Yr Warranty

BUFFALO
CHEMICAL RESISTANT
WHITE FOR ACIDIC

TRADER®

IP66 Combination Switched Sockets

BUC310RW
BUC315RW
BUC320FRW
BUC320RW
BUC332RW
BUC410RW
BUC420RW
BUC432RW
BUC440RW
BUC450RW
BUC510RW
BUC520RW
BUC532RW
BUC540RW
BUC550RW

See current catalogue for further detail

Flat Pin Models

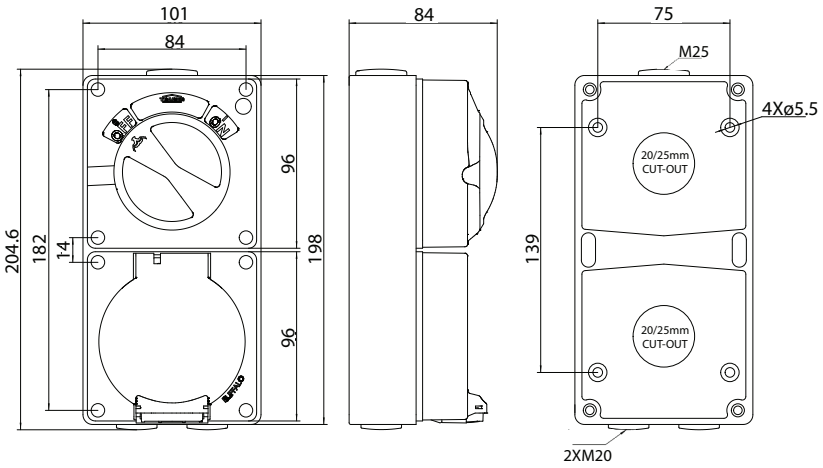

Round Pin Models

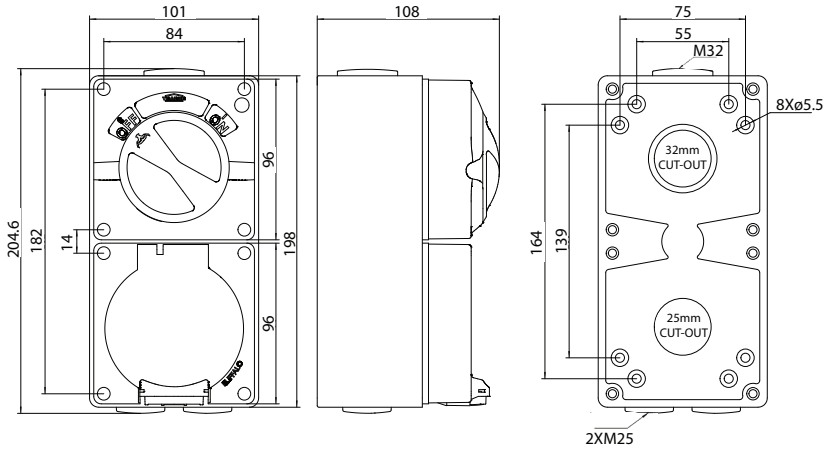

Small Single Phase
Flat pin
10A to 20A

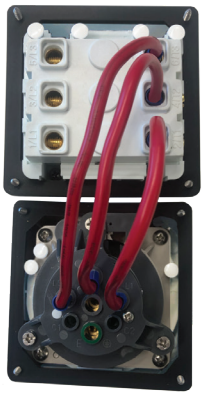

Size 1
Single/Three Phase
10A - 20A

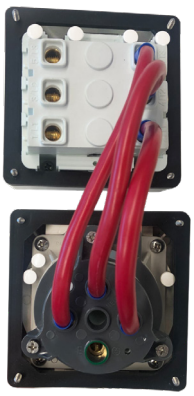

Size 2
Single/Three Phase
32A - 50A

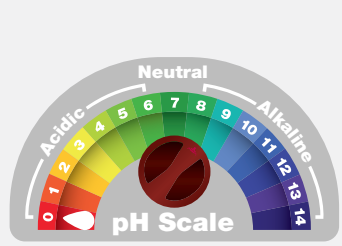

Cleaning Guide:

Spraying cleaning products on to electrical products is not recommended.

It is important to ensure that switches are turned off before cleaning.

Do not use any cleaning sprays - only wipe down with damp cloth or rub with dry cloth. (Do not use an abrasive cloth as it may scratch the plastic).

Do not use harsh chemical cleaners as these can break down the plastic and cause it to crack.

GSM Electrical (Australia) Pty Ltd
5-9 Rundle Street, Kent Town SA 5067
P: 1300 301 838 | E: service@gsme.com.au
www.gsme.com.au

100% AUSTRALIAN OWNED & OPERATED

10 Yr Warranty