TRADER BISON™

TRADER®

BIC332H6
BIC363H6
BIC432H3
BIC432H6
BIC532H6
BIC563H6

See current catalogue for further detail

IP67 Combination Switched Sockets

Bison offers an extensive range of IP67 rated Combination Switched Sockets that are available in three-pin 32A (6h Earth), four-pin 32A (3h & 6h Earth) and five-pin 32A (6h Earth) to 63A (6h Earth) designs.

Phase links are factory fitted between switches and sockets.

Colours align with IEC 60309.

Socket combinations are mechanically interlocked and will not switch on without a plug inserted.

Pin & Volt	Cat No.	Current Rating (A)	Pin Config	Pin Config Code (Table 1)	AC21 Rating (A)	AC23A Rating (A)	Minimum Conductor Size (mm)	Maximum Conductor Size (mm²)	Dimensions H* x W x D (mm)
3 Pin 250V~	BIC332H6	32	3 Round	A	32	32	Ø7.5	25	225 x 118 x 162
	BIC363H6	63	3 Round	B	63	63	Ø7.5	25	262 x 162 x 196
4 Pin 500V~	BIC432H3	32	4 Round	D	32	32	Ø7.5	25	225 x 118 x 162
	BIC432H6	32	4 Round	C	32	32	Ø7.5	25	225 x 118 x 162
5 Pin 500V~	BIC532H6	32	5 Round	E	32	32	Ø7.5	25	225 x 118 x 162
	BIC563H6	63	5 Round	F	63	63 (415V) 45A (500V) 32A (690V)	Ø10	35	262 x 162 x 196

Cleaning Guide:

Spraying cleaning products on to electrical products is not recommended.

It is important to ensure that switches are turned off before cleaning.

Do not use any cleaning sprays - only wipe down with damp cloth or rub with dry cloth. (Do not use an abrasive cloth as it may scratch the plastic).

Do not use harsh chemical cleaners as these can break down the plastic and cause it to crack.

Certification Number:
GMA-528207
GSM Electrical (Australia) Pty Ltd
5-9 Rundle Street, Kent Town SA 5067
P: 1300 301 838 | E: service@gsme.com.au
www.gsme.com.au

100% AUSTRALIAN OWNED & OPERATED

10 Yr Warranty TRADER

TRADER BISON™

TRADER®

BIC332H6
BIC363H6
BIC432H3
BIC432H6
BIC532H6
BIC563H6

See current catalogue for further detail

IP67 Combination Switched Sockets

3, 4, 5 32A Pin Models

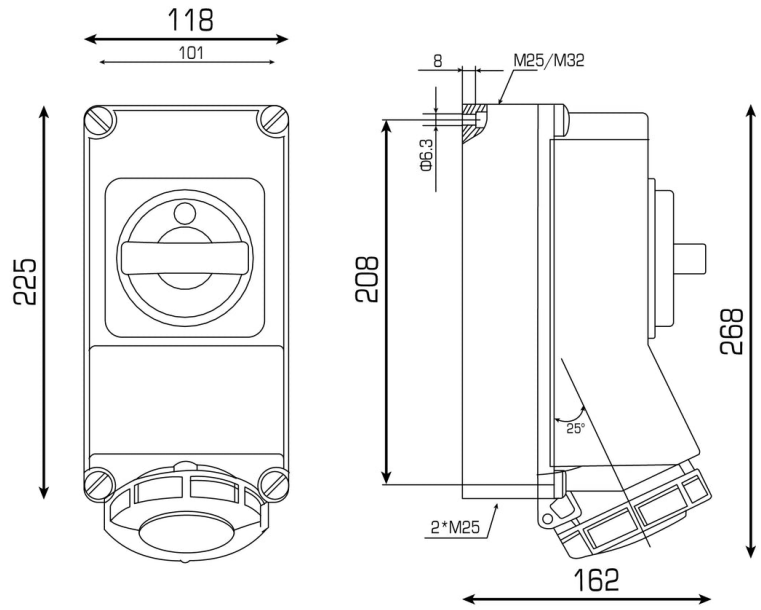

5 Pin 63A Models

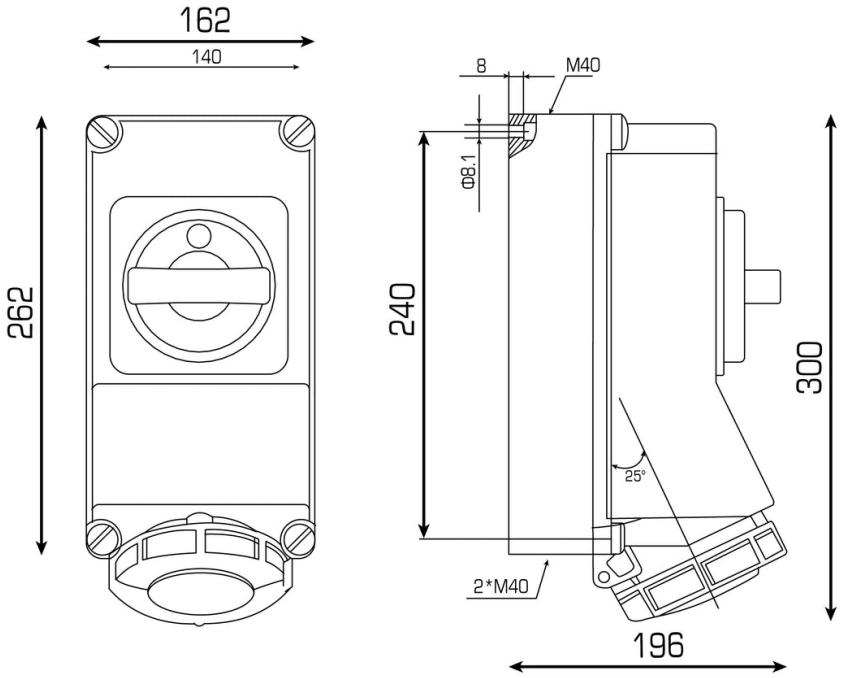

Cleaning Guide:

Spraying cleaning products on to electrical products is not recommended.

It is important to ensure that switches are turned off before cleaning.

Do not use any cleaning sprays - only wipe down with damp cloth or rub with dry cloth. (Do not use an abrasive cloth as it may scratch the plastic).

Do not use harsh chemical cleaners as these can break down the plastic and cause it to crack.

Certification Number:
GMA-528207
GSM Electrical (Australia) Pty Ltd
5-9 Rundle Street, Kent Town SA 5067
P: 1300 301 838 | E: service@gsme.com.au
www.gsme.com.au

100% AUSTRALIAN OWNED & OPERATED

10 Yr Warranty